Kestlik ehitus

Tallinna Manufaktuuri lasteaed

Renee Puusepp, PhD

Creatomus

EKA PAKK

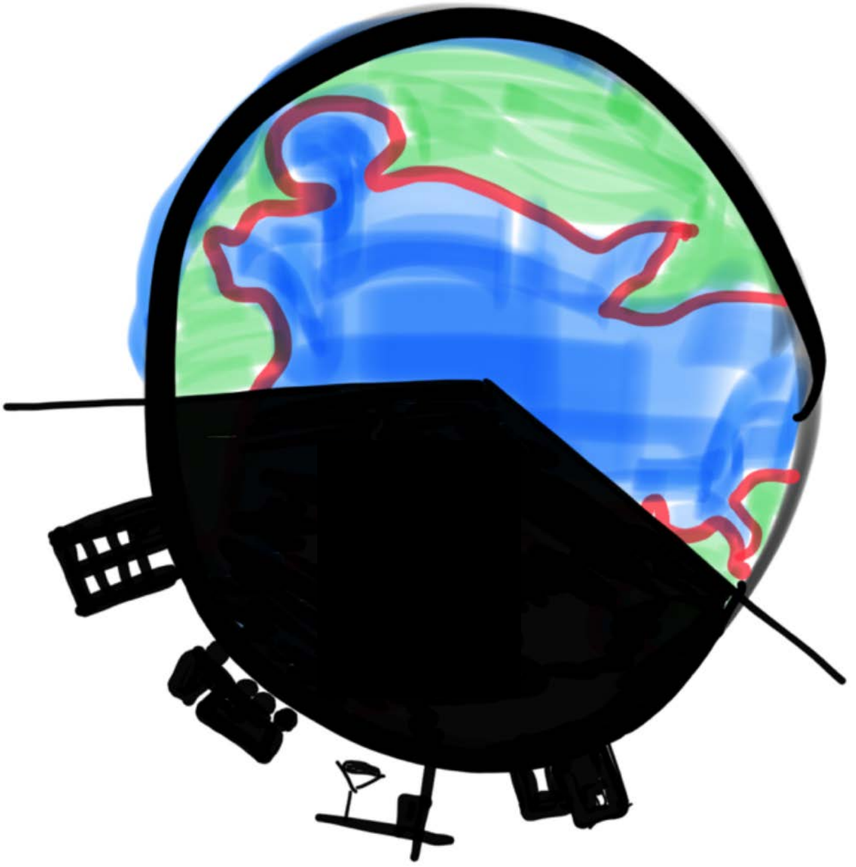

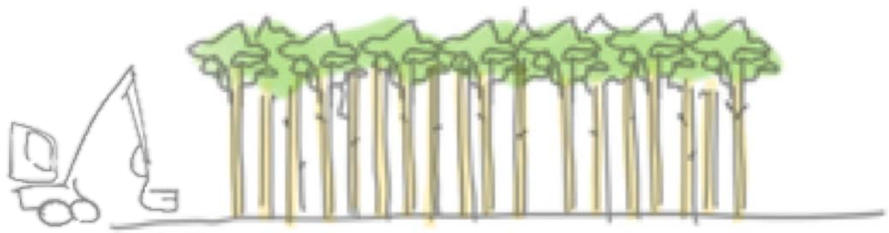

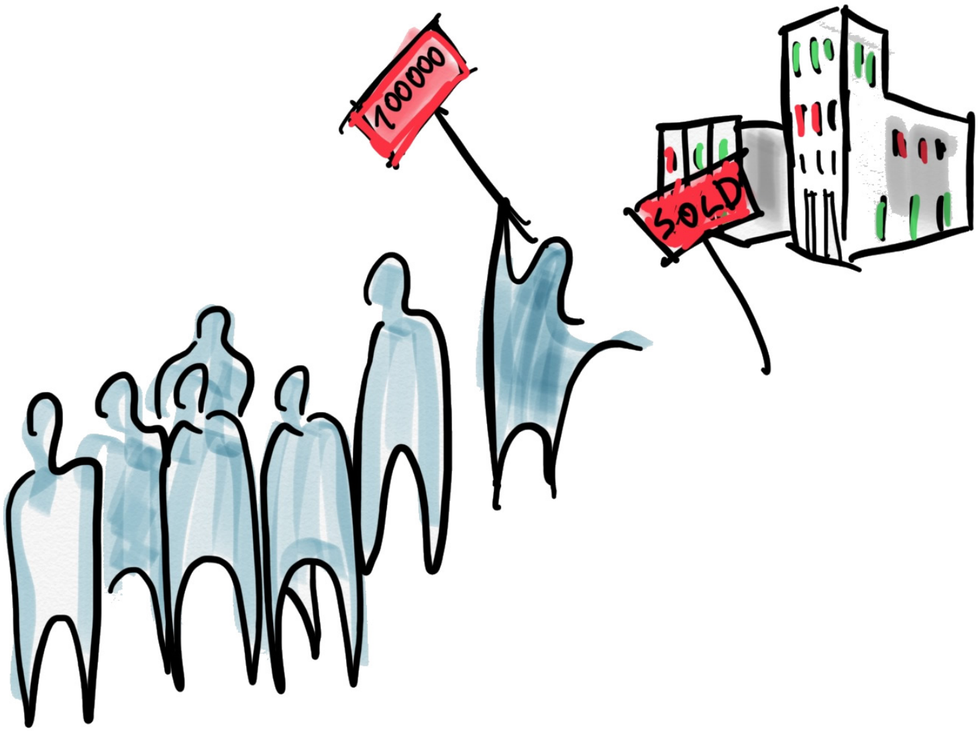
100000
SOLD

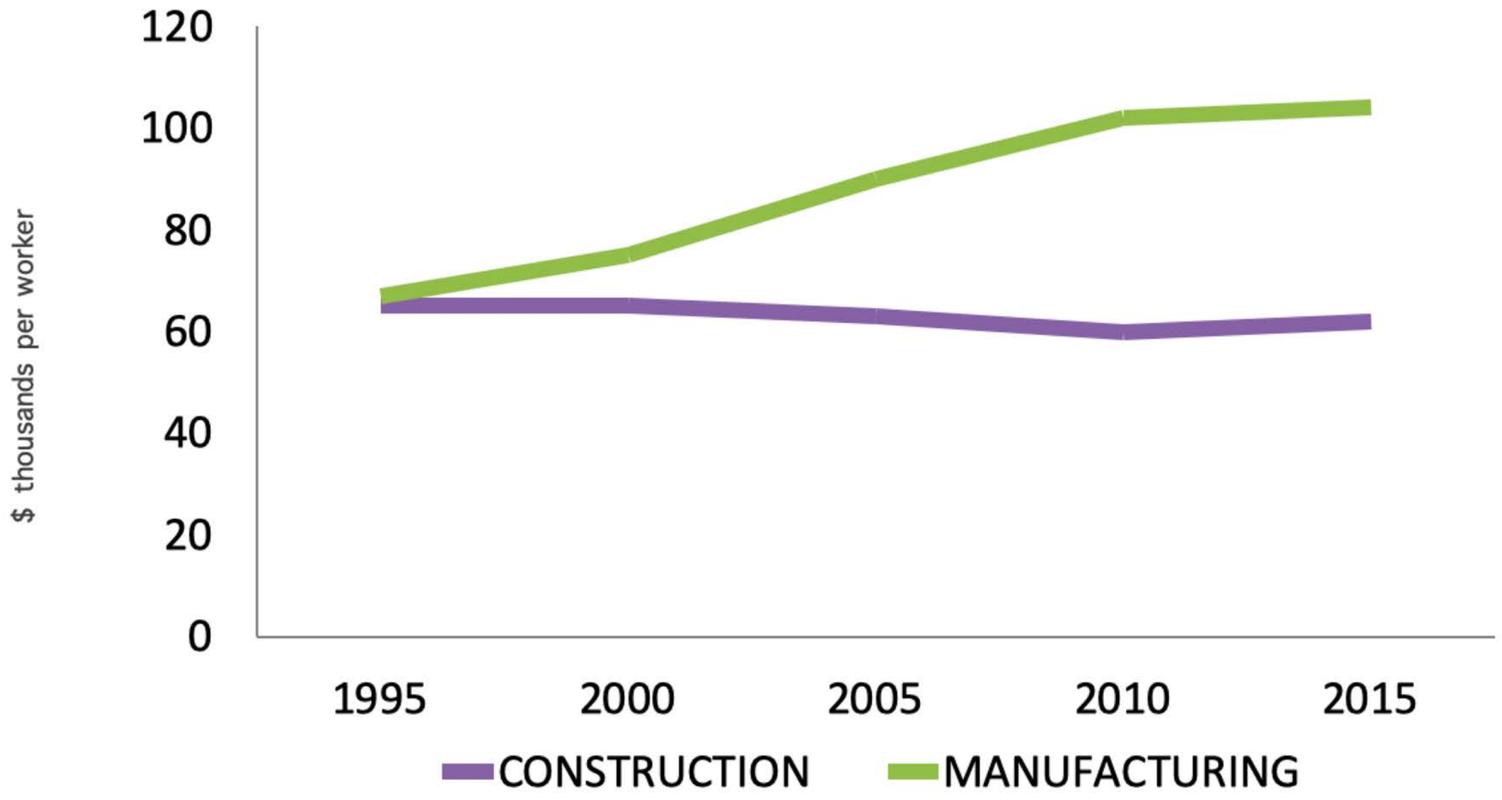

Source: www.mckinsey.com

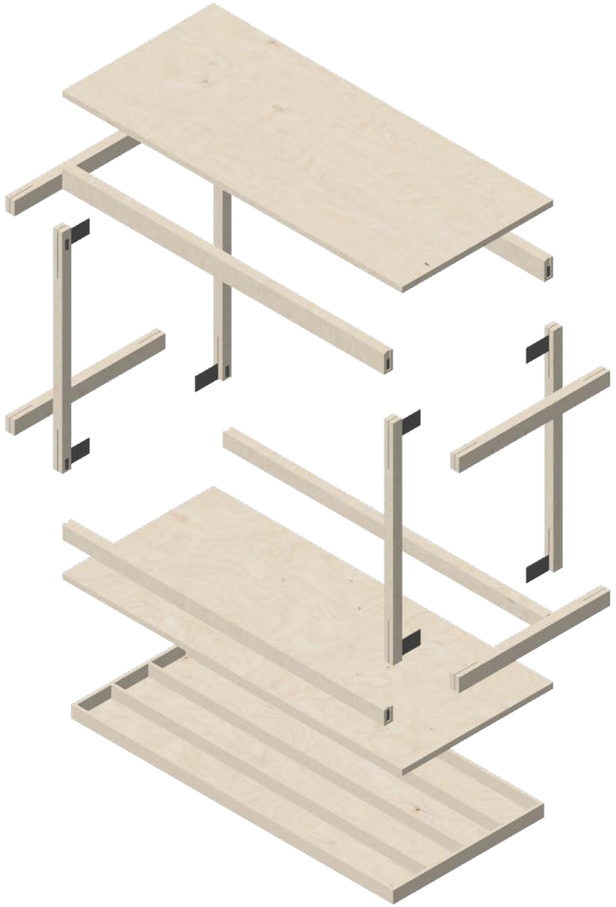

Modulaarne kortermaja. Arhitekt: Lauri Läänelaid

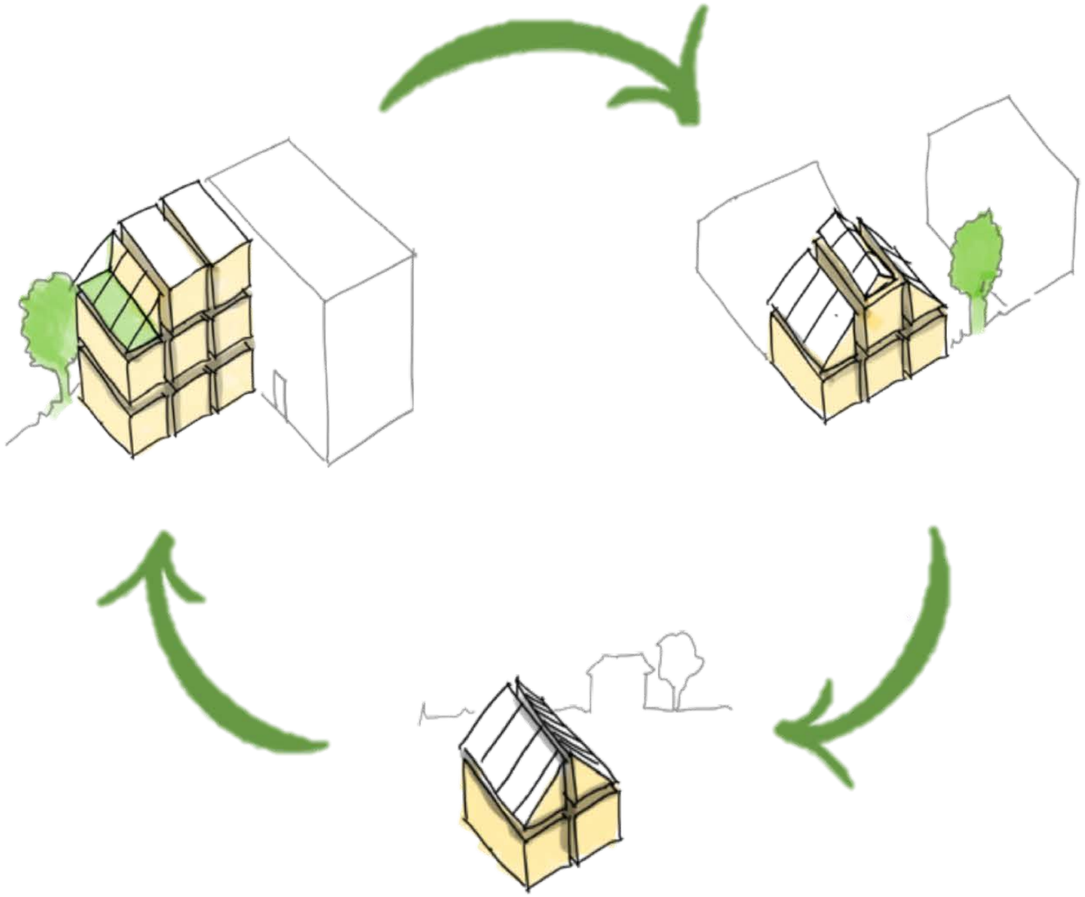

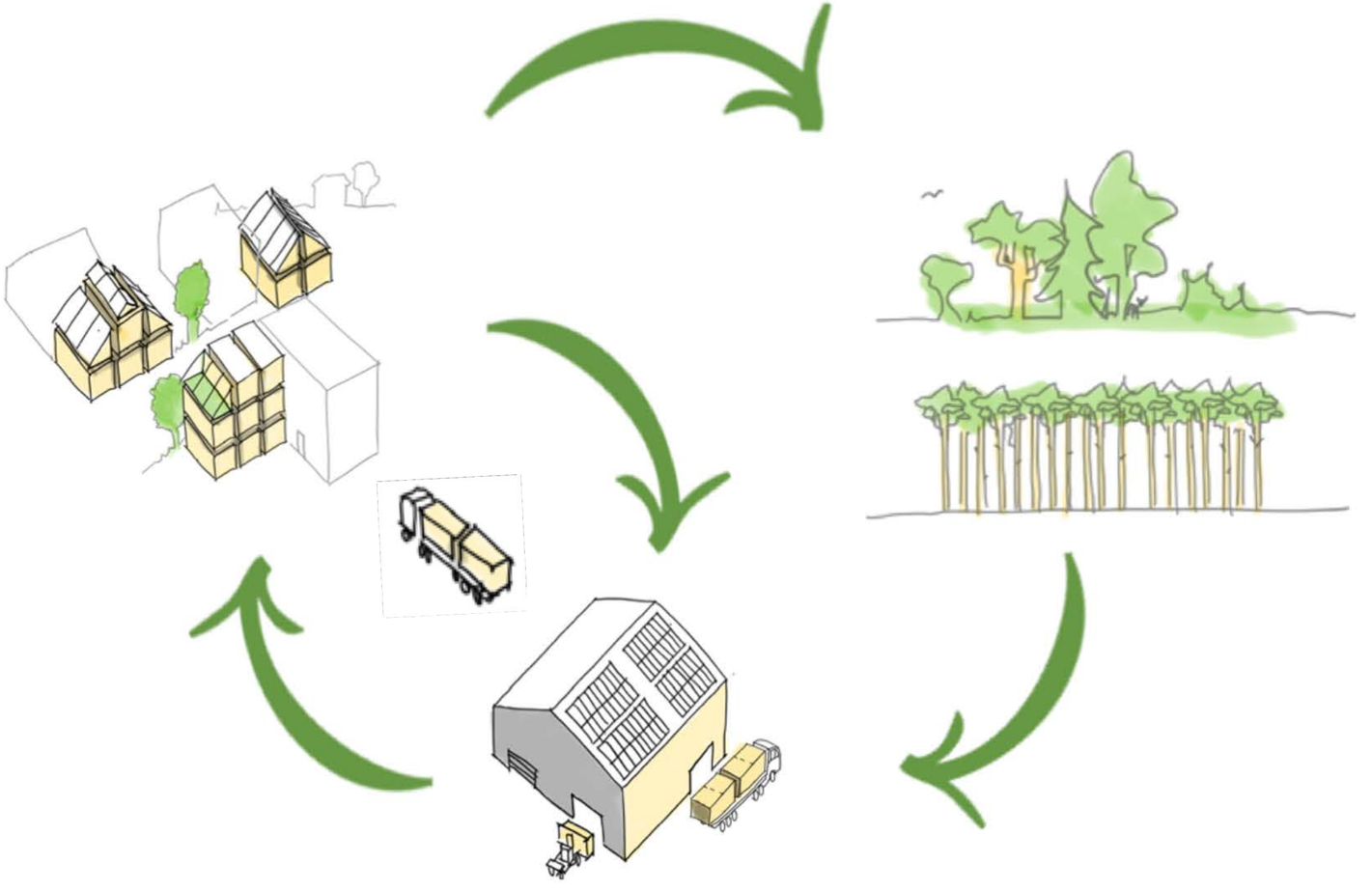

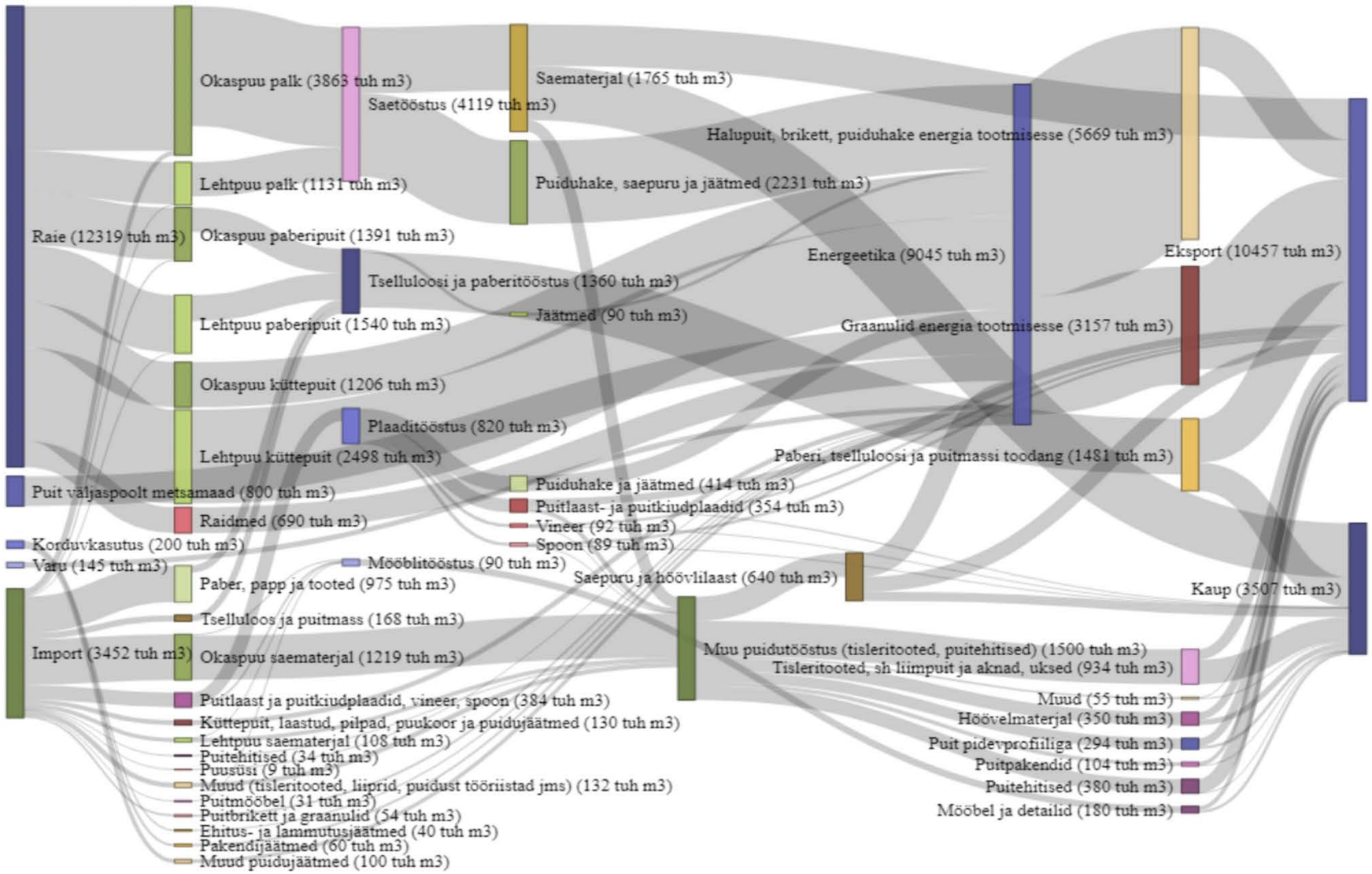

ADDVAL-BIOEC (2021). Lisandväärtuse tõstmine ja toorme tõhusam kasutamine Eesti biomajanduses

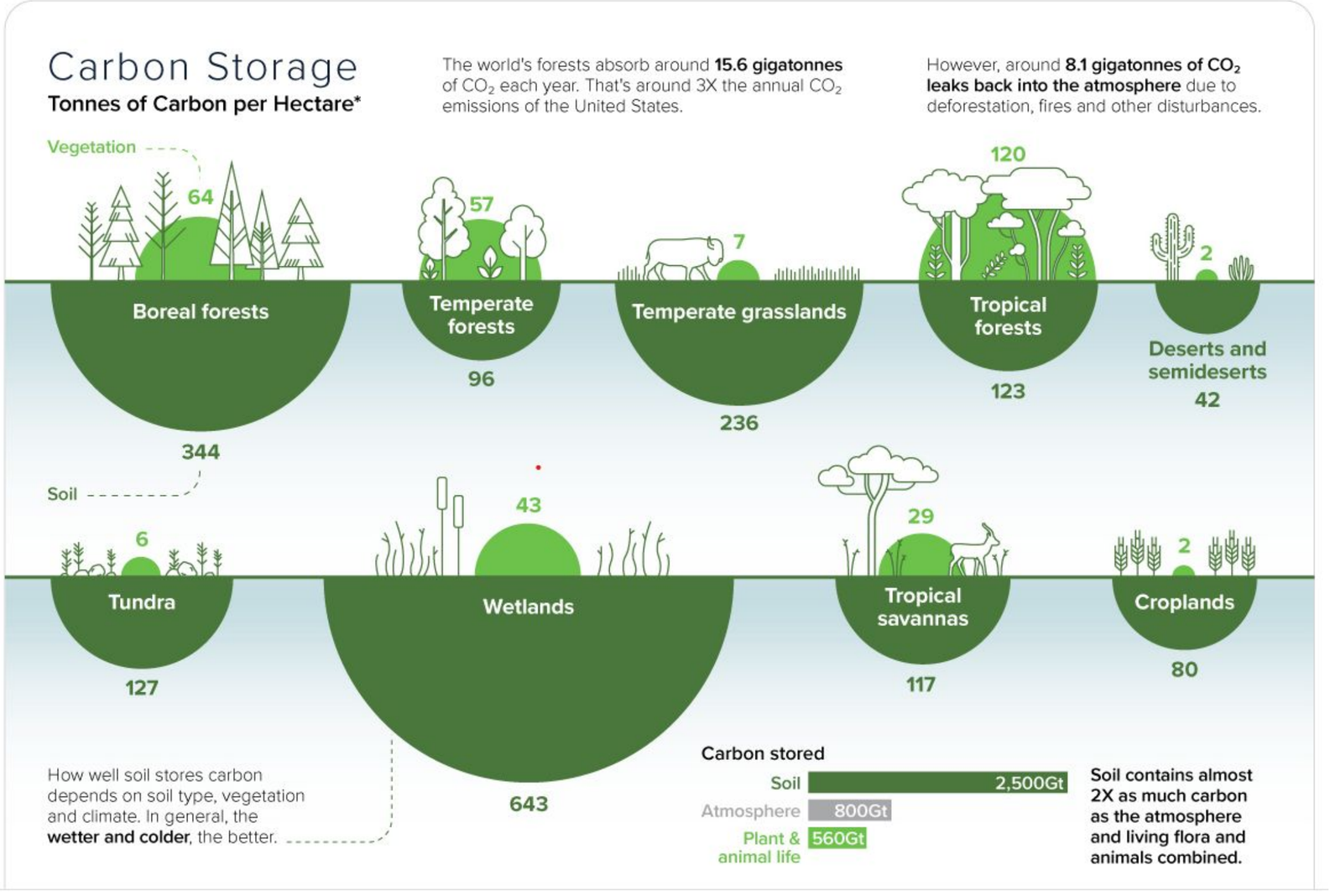

Source: https://www.visualcapitalist.com/sp/visualizing-carbon-storage-in-earths-ecosystems/

0-heitega hooned
Süsinikku siduvad ehitusmaterjalid
Madal energiatarve

100% Eesti asi
Kogu tarneahel Eesti toormest ja tootjatest

Hajutatud energiatootmine
Integreeritud hoonetega
Tagatud energiajulgeolek

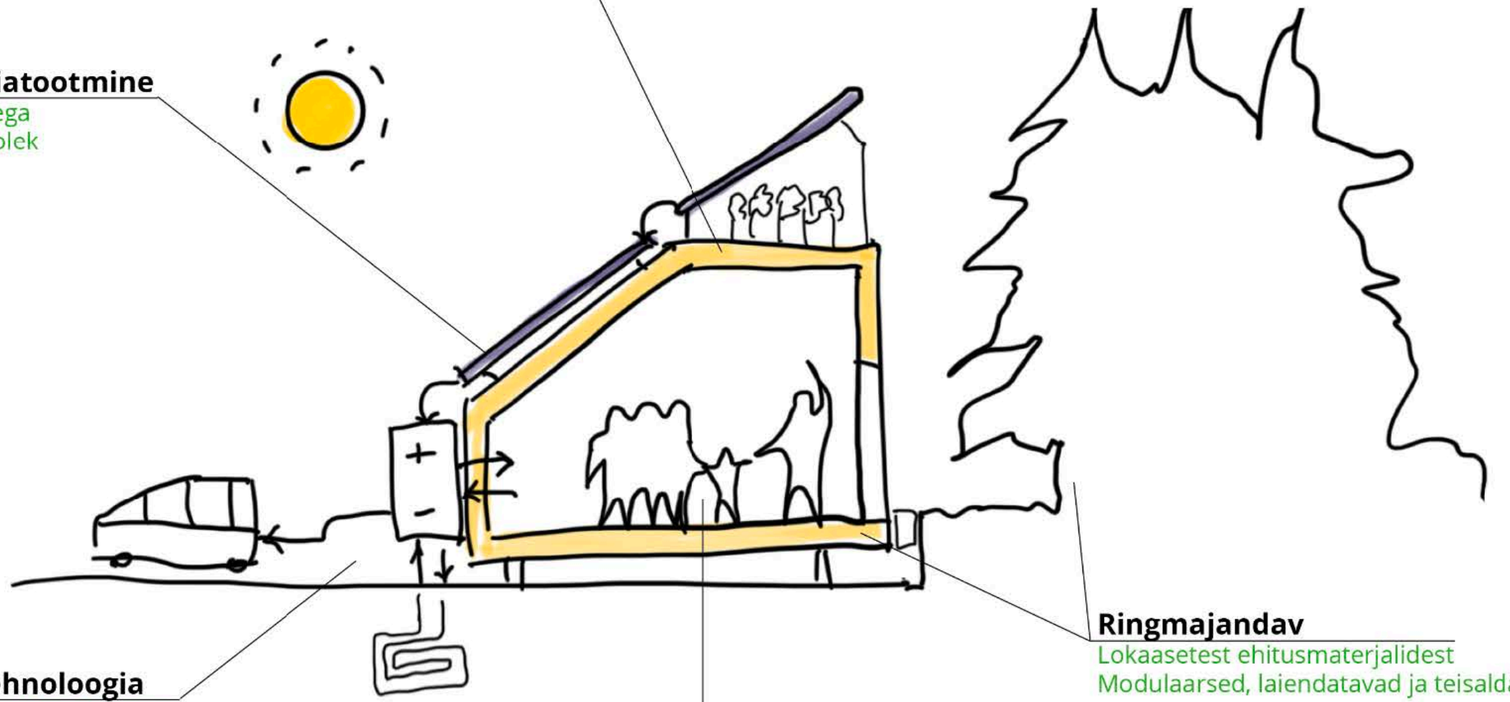

Ringmajandav
Lokaasetest ehitusmaterjalidest
Modulaarsed, laiendatavad ja teisaldatavad

Tehasemaja tehnoloogia
Edendab kohalikku ehitustööstust
Eksporditav EU-sse ja Ukraina ülesehituseks

Kogukondadele
Kestlik elu maapiirkondades
Vajaduspõhine hoonestus

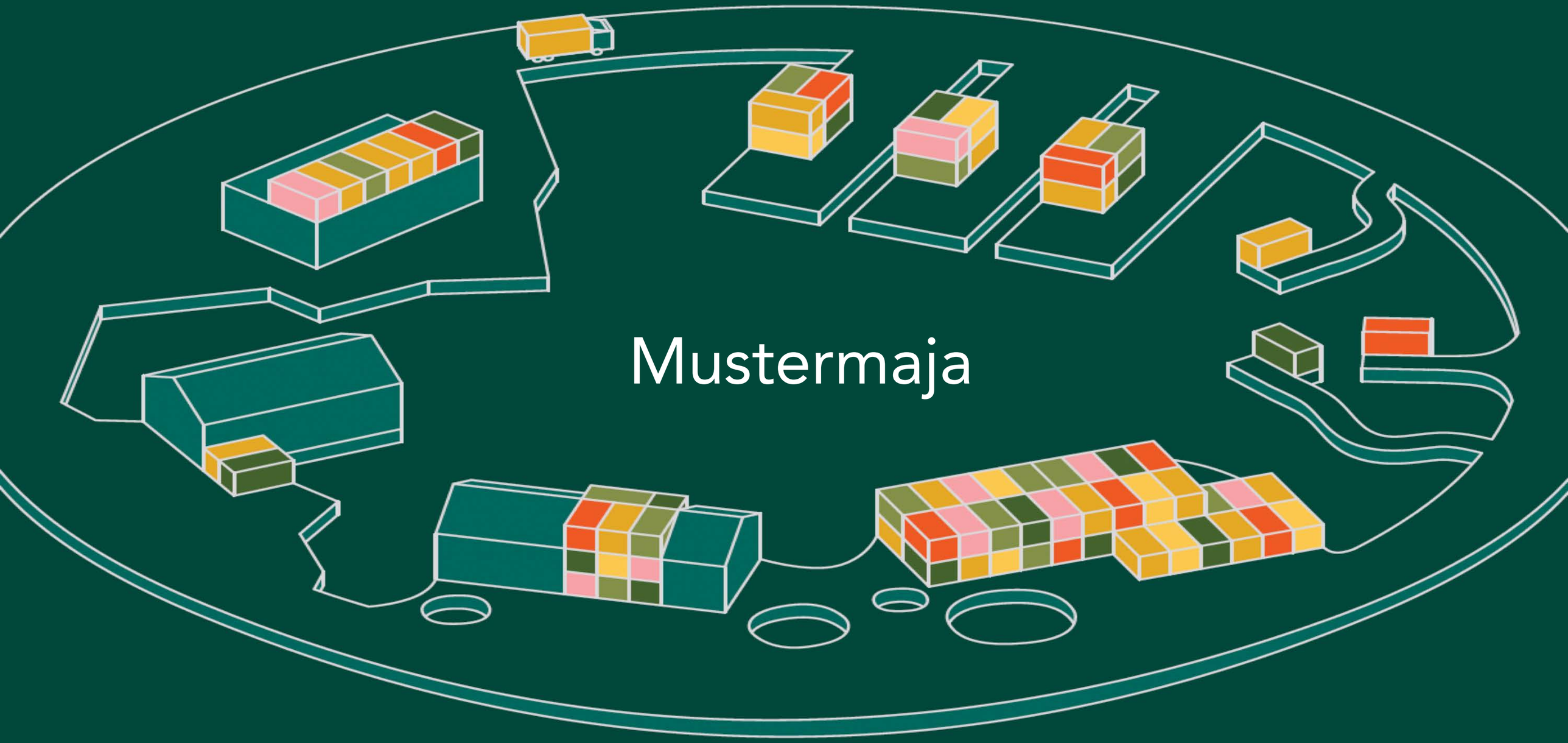
Mustermaja

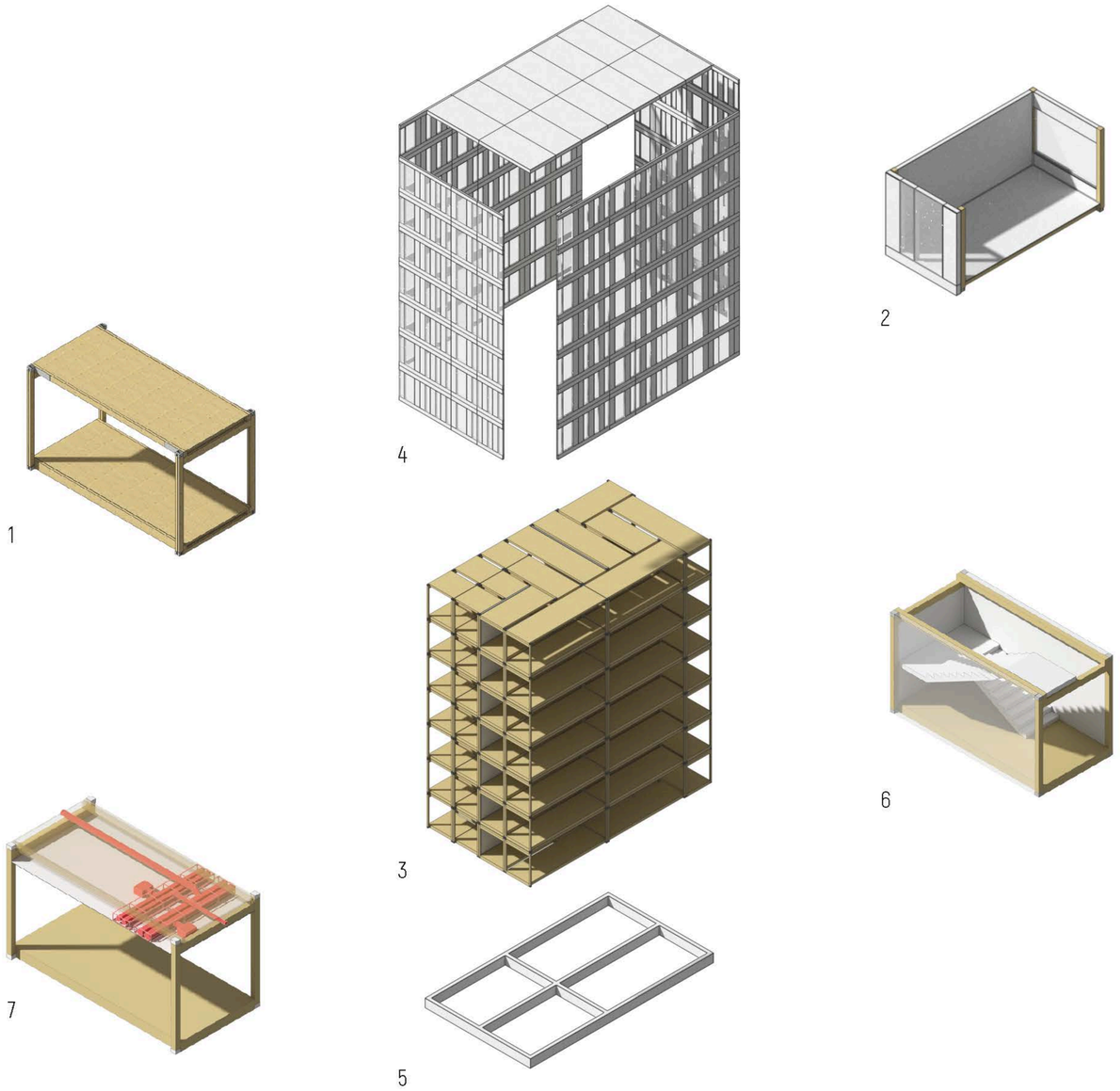

Building components

1. Module
2. Infill
3. Skeleton
4. Skin
5. Base
6. Circulation
7. Technical systems

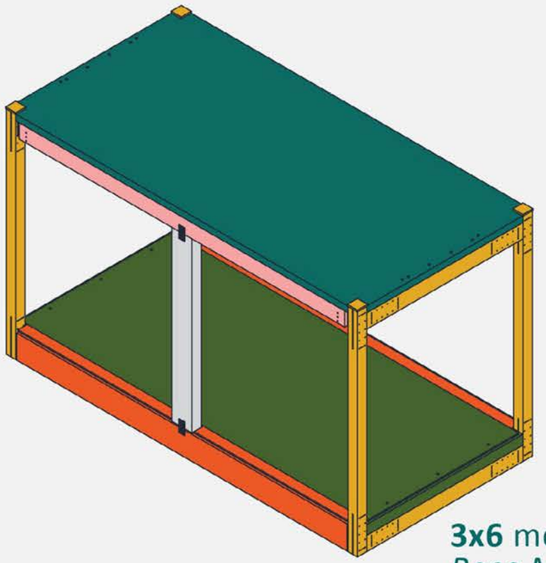

3x6 meters
Base Module

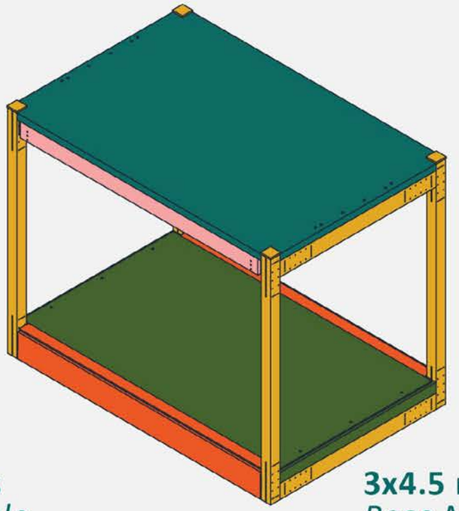

3x4.5 meters
Base Module

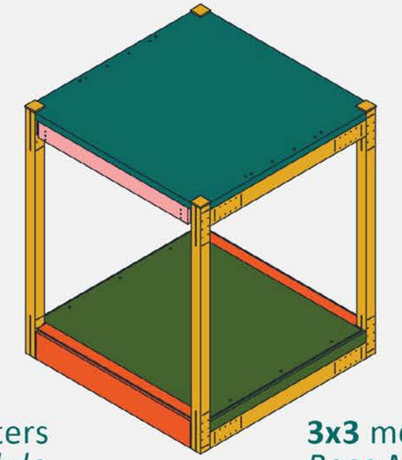

3x3 meters
Base Module

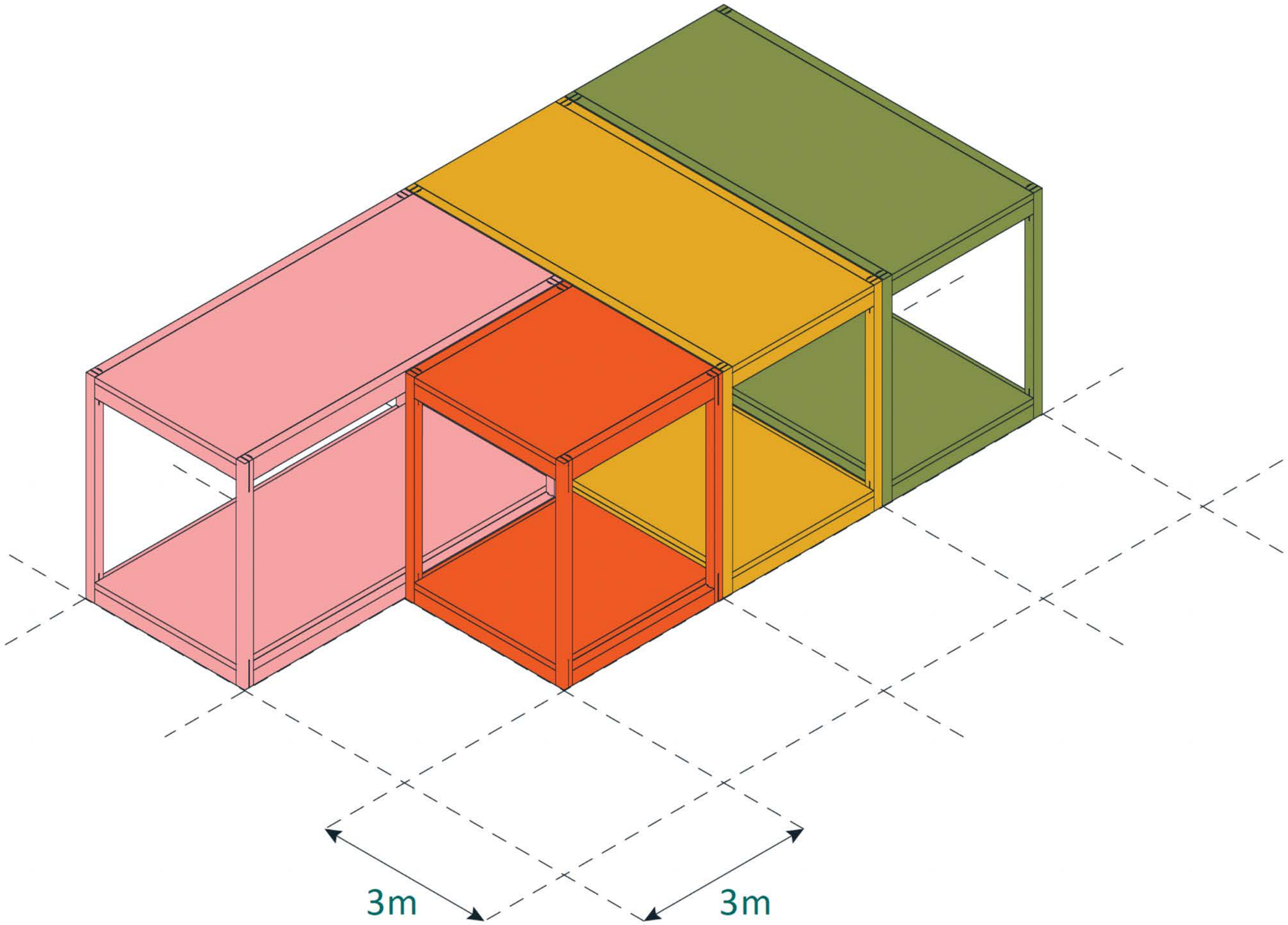
3m
3m

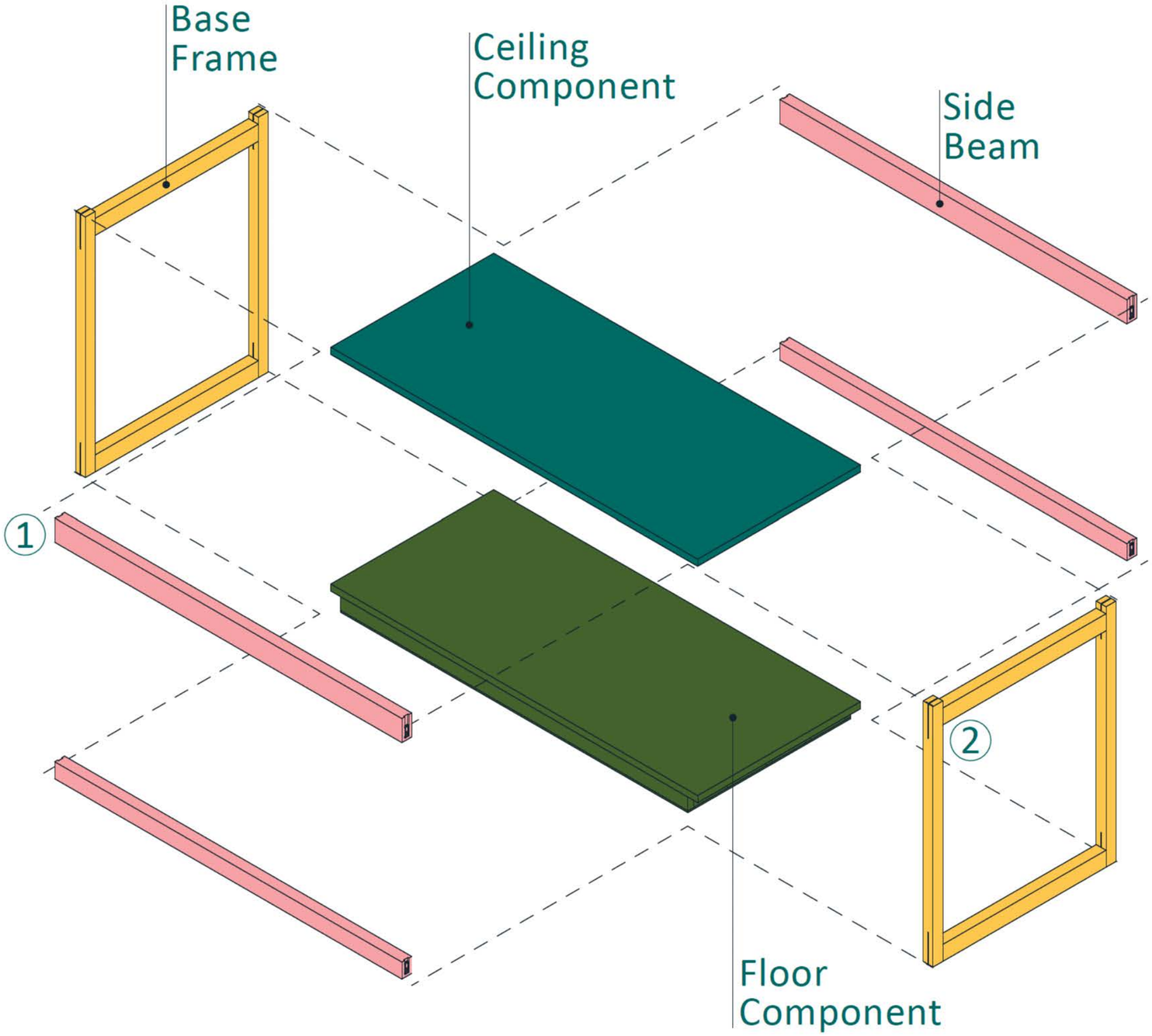

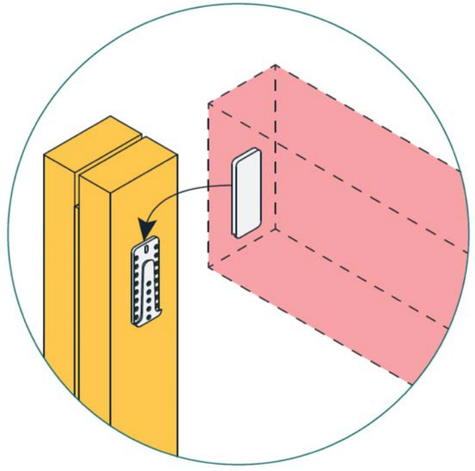

1
concealed timber
connector

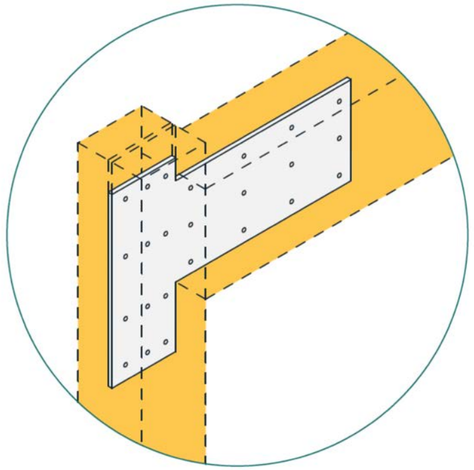

2
steel plate
connector

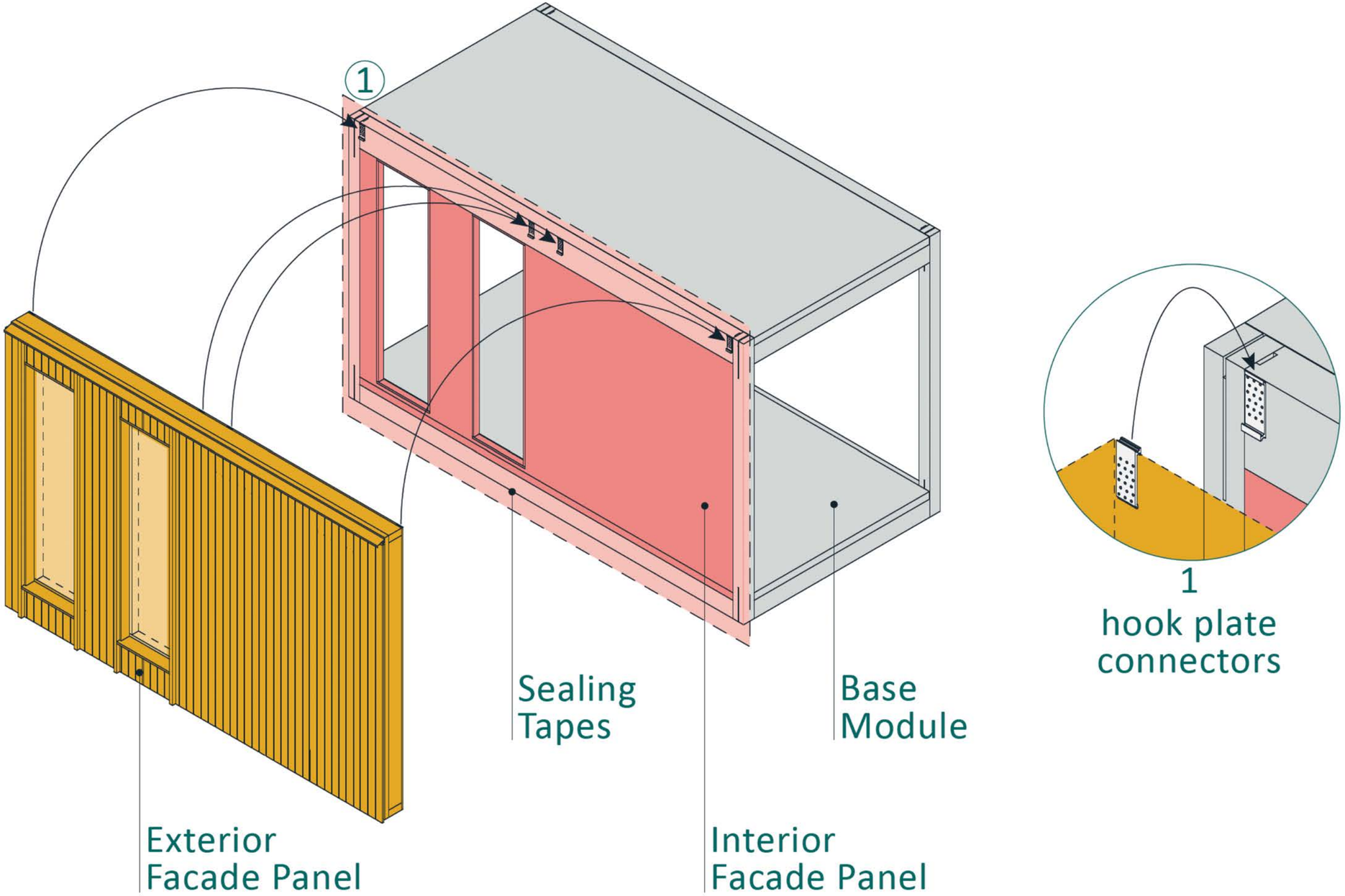
1
Exterior
Facade Panel
Sealing
Tapes
Interior
Facade Panel
Base
Module
1
hook plate
connectors

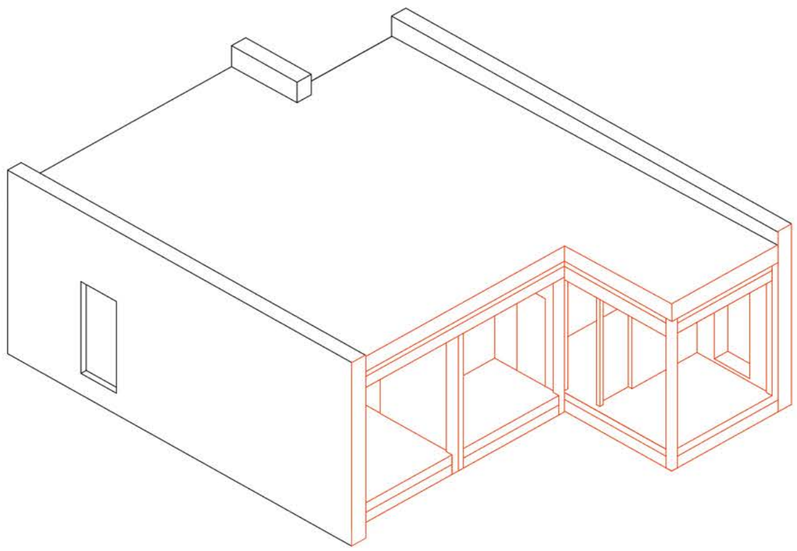

1.

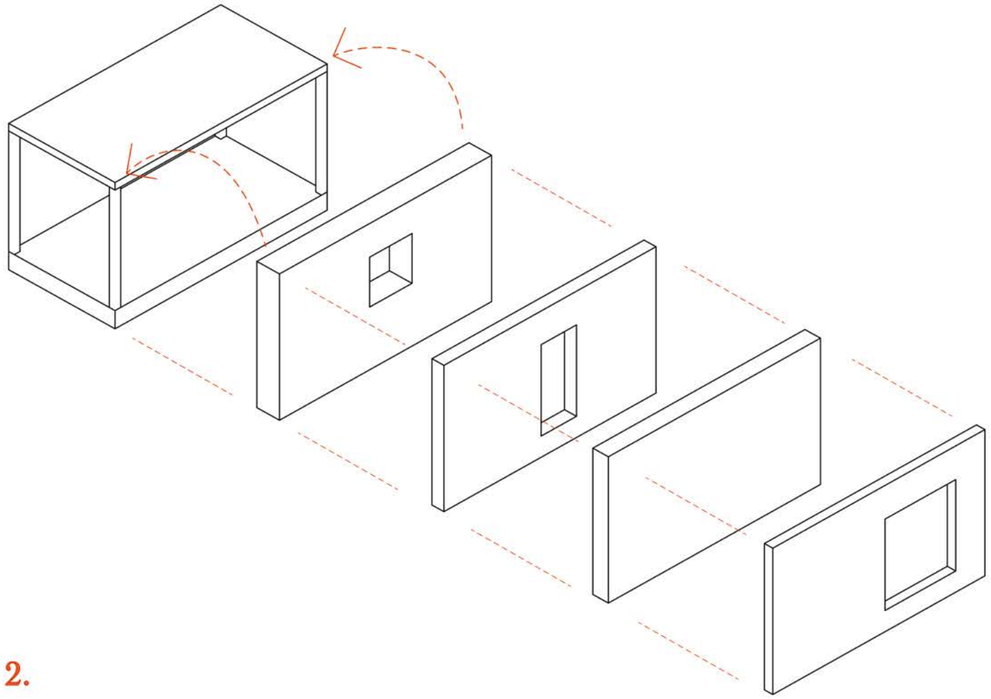

2.

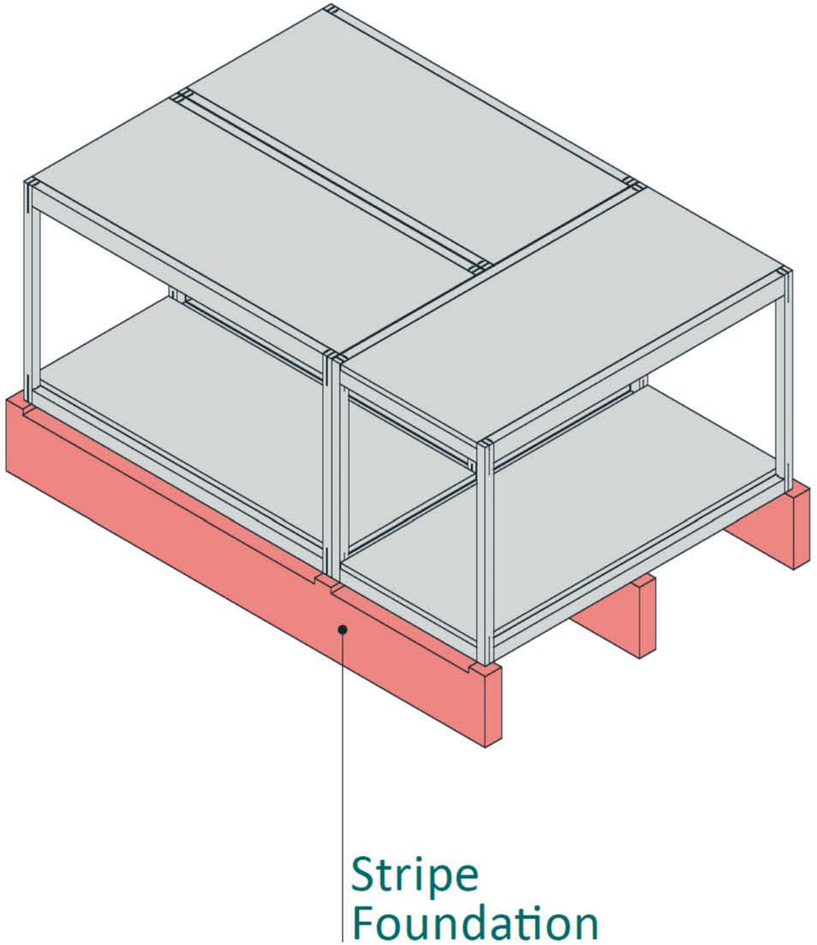
Stripe
Foundation

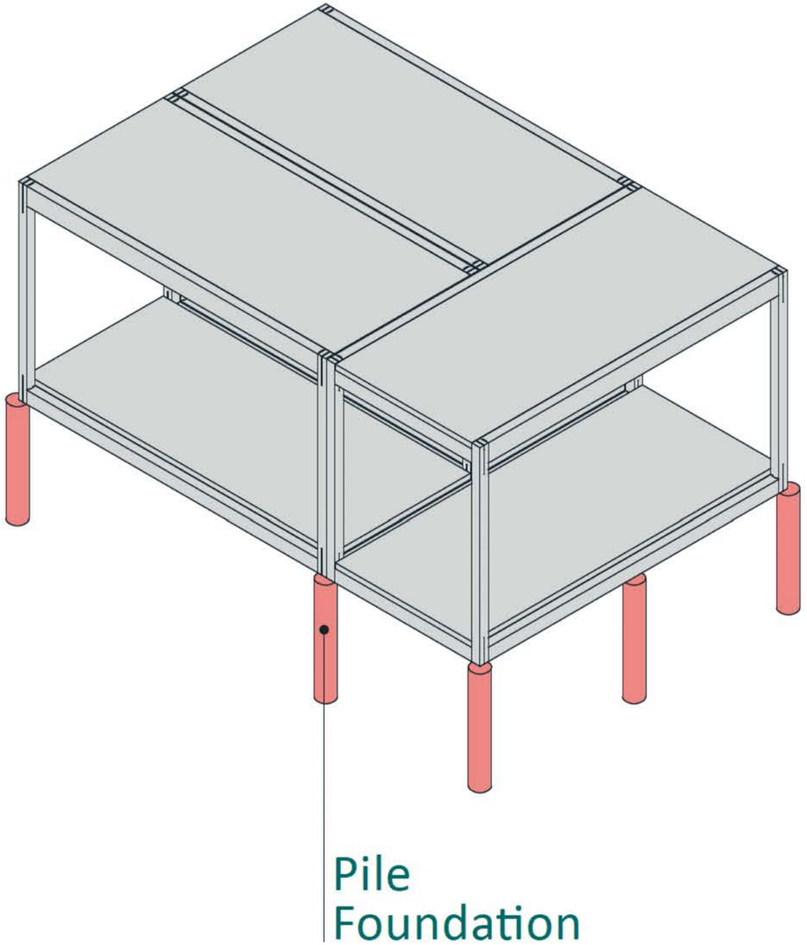
Pile
Foundation

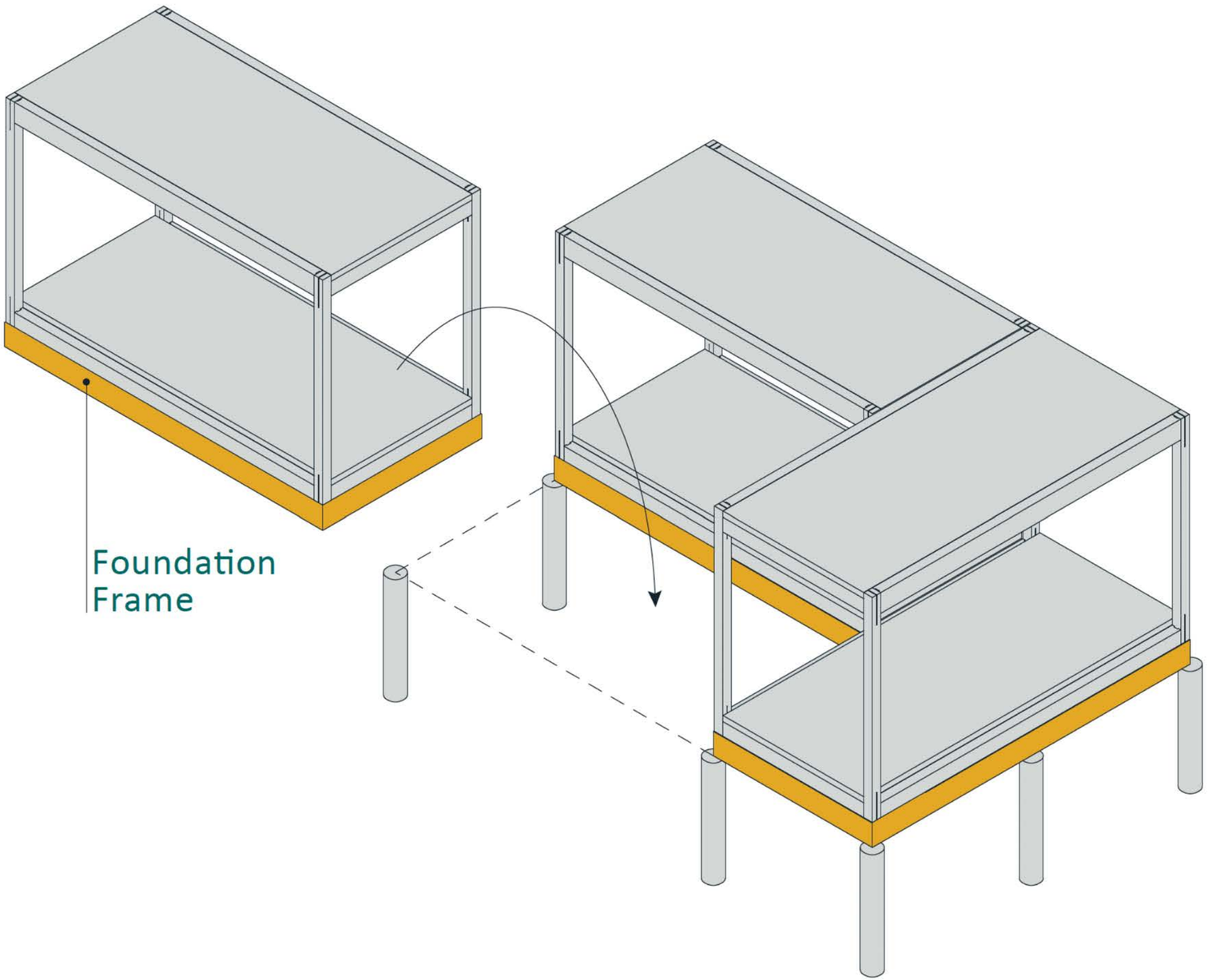
Foundation
Frame

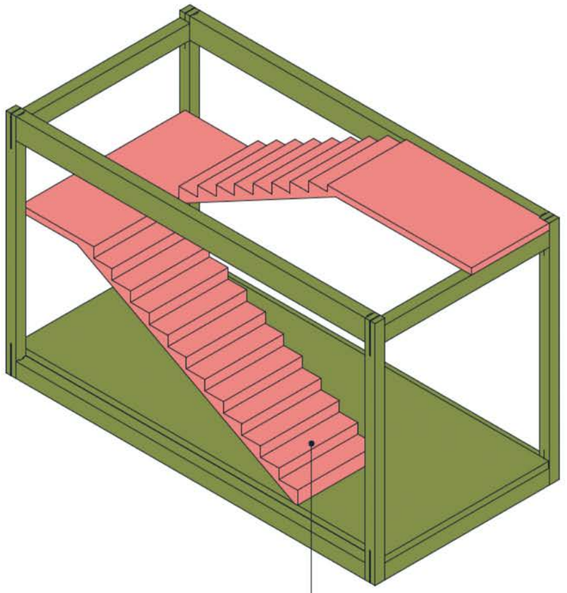

U-turn or
winder stair

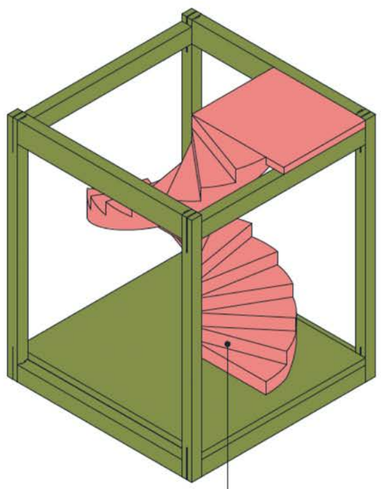

spiral
stair

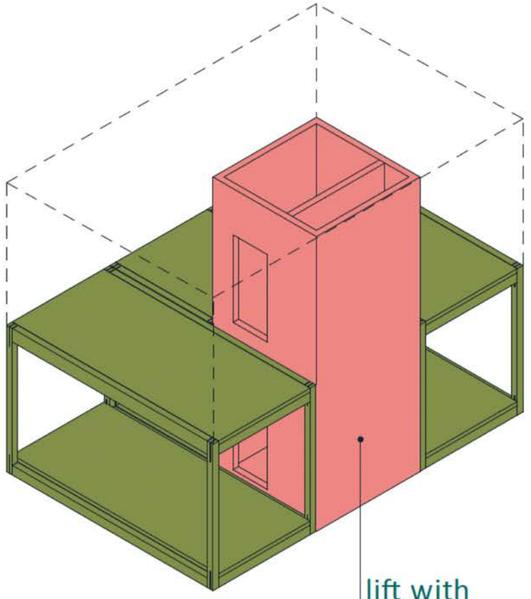

lift with
shaft

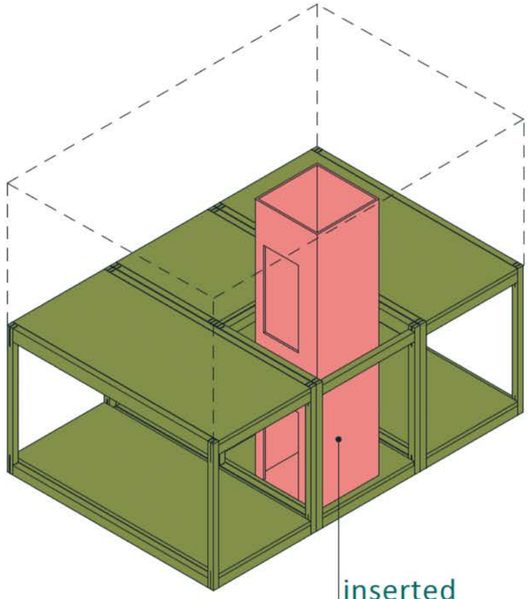

inserted
mini-lift

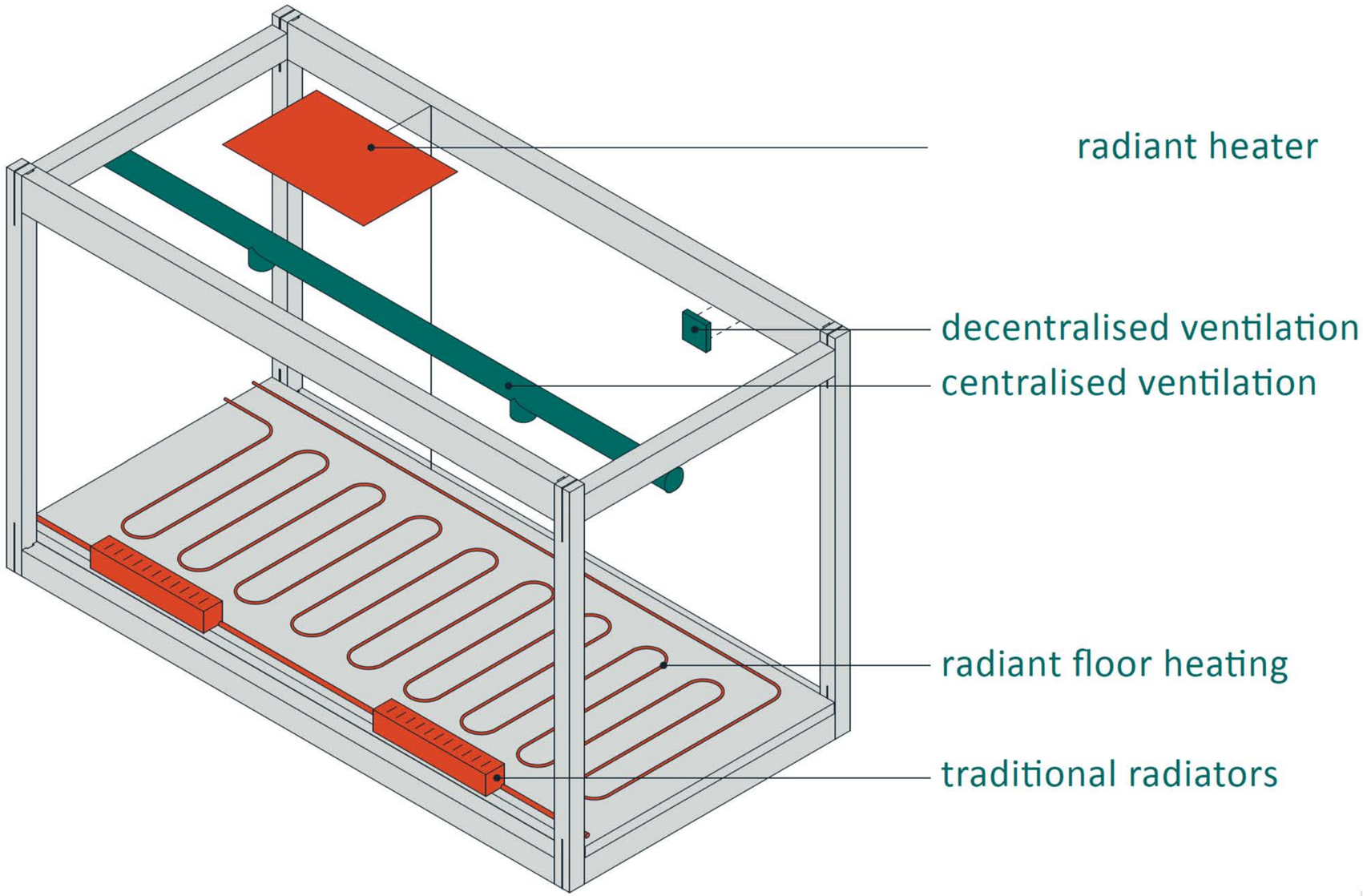
radiant heater
decentralised ventilation
centralised ventilation
radiant floor heating
traditional radiators

Vabavara

CIRCULARITY

3cycle buildings are circular in multiple levels. The largest circular unit in the system is the ***entire building***, as it can be demounted, moved and reassembled on a different site, if the need occurs. Secondly, full ***room modules*** can be reassembled, removed or added to a building. The smallest reusable parts of the building systems are its ***components***. They are designed for disassembly, allow for easy repair or upgrade and can be easily reused in differing combinations in the same or other buildings. All building components, designed based on the principles of the *3cycle* system, should be recyclable and maximise the use of low-emission and bio-based materials.

The core of the building system is its design for disassembly, following the standard *ISO 20887*. Connections are easy to open and demounting does not result in damage or contamination of the buildings, modules or components materials. Preserving their value keeps the materials from being dumped on landfills or burned in incineration plants and makes them more attractive for future reuse. All the materials which continue to be reused and which are circulating in the building stock save on future extractions of resources and productions of materials, thus reducing the environmental impact on climate and ecosystems. This way, *3cycle* buildings can contribute to the transition towards a sustainable building sector with responsible consumption and production.

To ensure the circularity of the *3cycle* system any future adaptations should be in accordance with the described circularity levels and the standard *ISO 20887*.

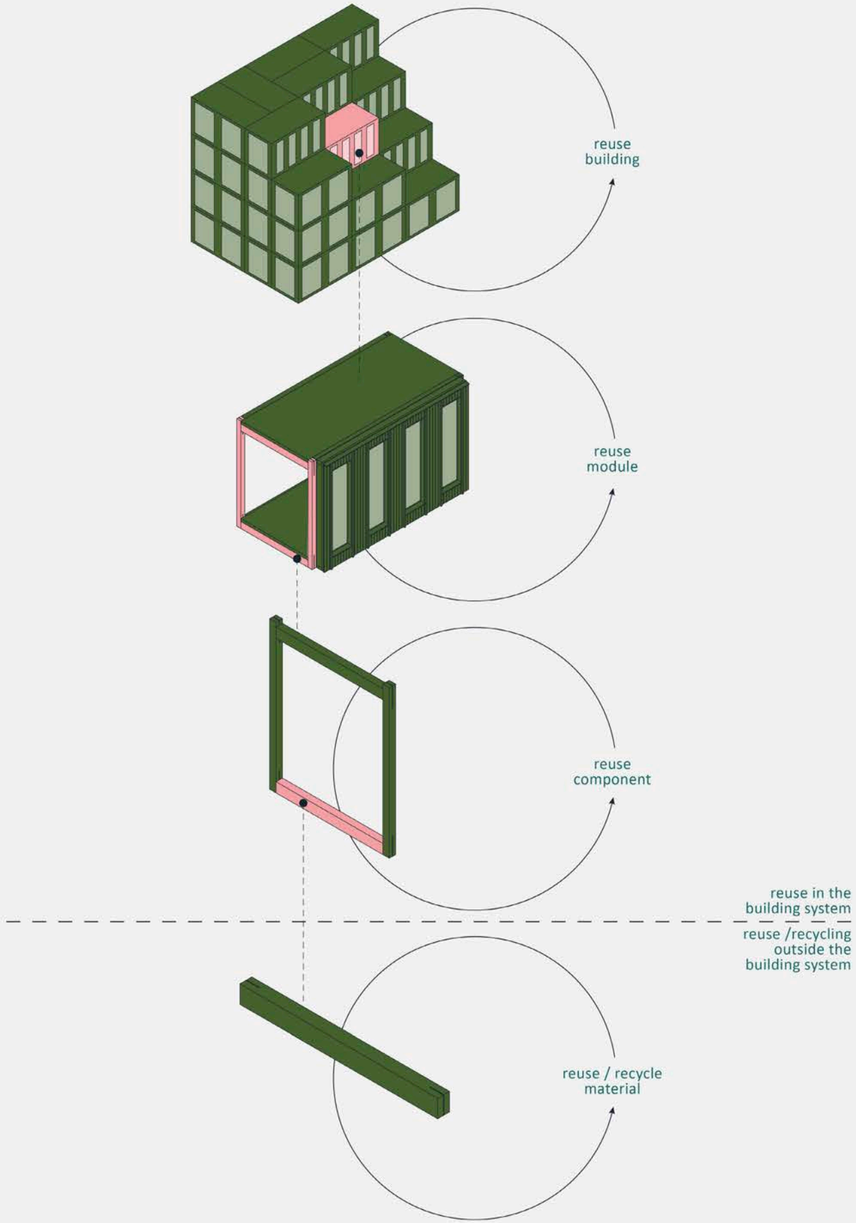

3Cycle system guide, NOMAD architects

Photo: Sven-Olof Englund

Elektrilevi Training Centre
EKA, NOMAD, WhatIF


Photo: Sven-Olof Englund

builtbn.org

Elektrilevi Training Centre - Built by Nature

Elektrilevi Training Centre

Creatomus Solutions / Estonian Academy of Arts. Kiili, Estonia

Showcasing a modular, circular timber system.

The 505 m², two-storey Elektrilevi Training Centre, completed in 2024 with the Estonian Academy of Arts, pilots

3 NÄDALAT

TOOTMINE

3 PÄEVA

KOOSTE

140,9 t CO_2e
Heidetud õhku

203,7 t CO_2e bio
Talletatud hoones

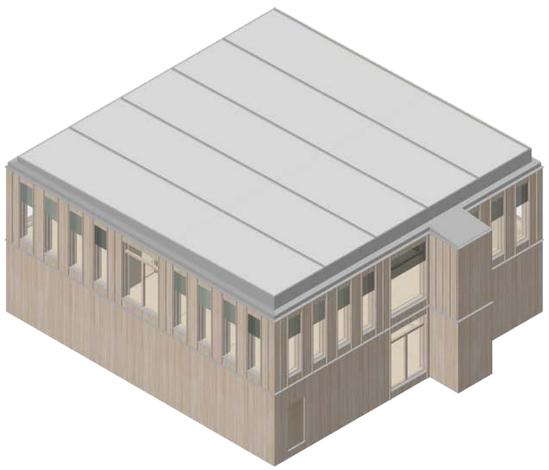

Eskiis V1

444.2m2

161,6 t CO_2e
Heidetud õhku

237,8 t CO_2e bio
Talletatud hoones

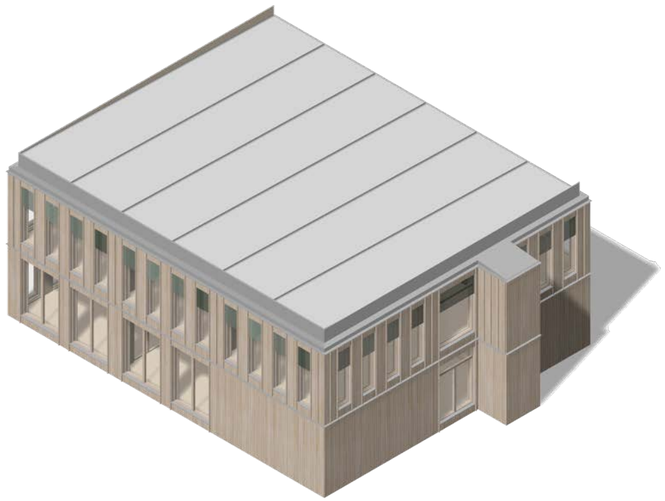

Eskiis V2

524.7 m2

183,8 t CO_2e
Heidetud õhku

288,3 t CO_2e bio
Talletatud hoones

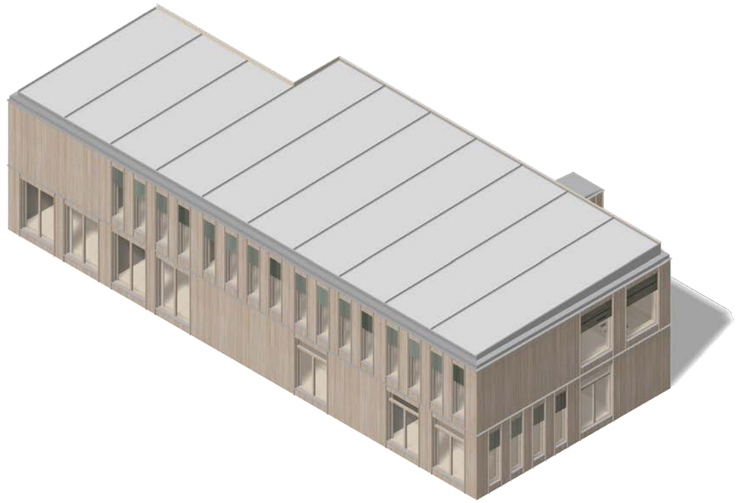

Eskiis V3

640.5m2

Originaal

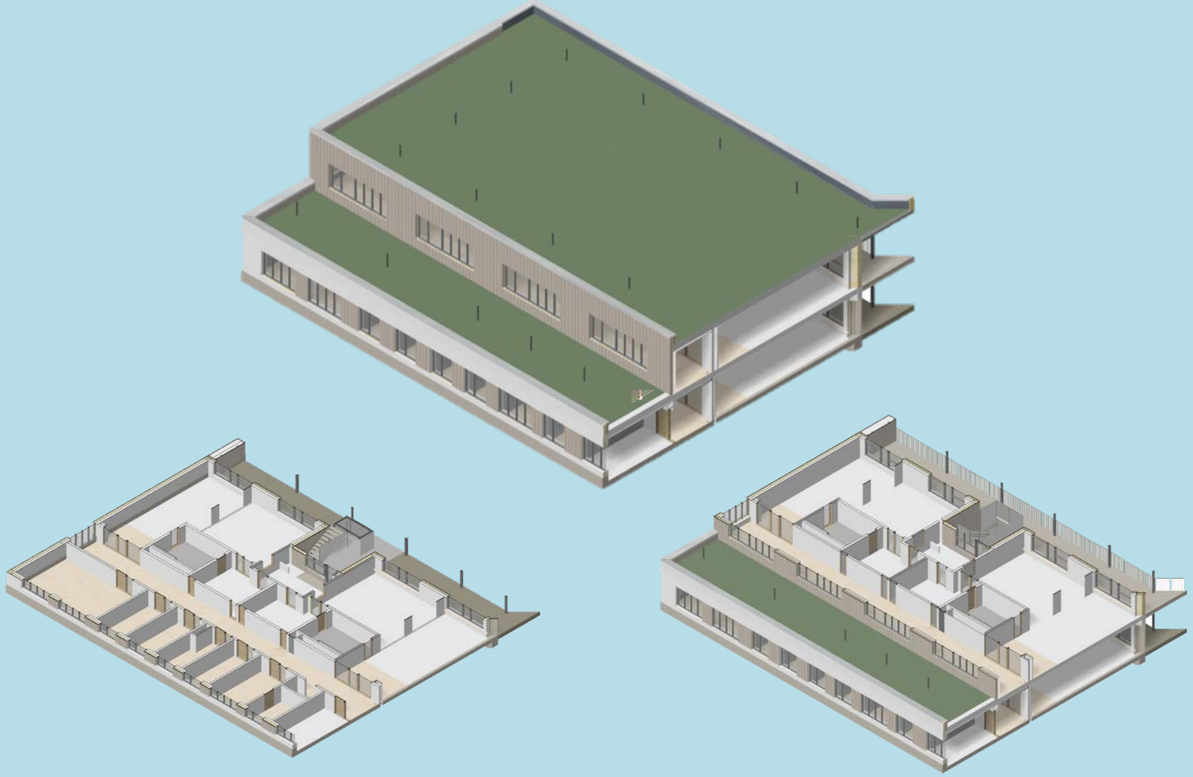

1. Korrus

2. Korrus

Kasulik pind: 1044m2
Piirete u-väärtused: vastavalt projektile

Musterlasteaed

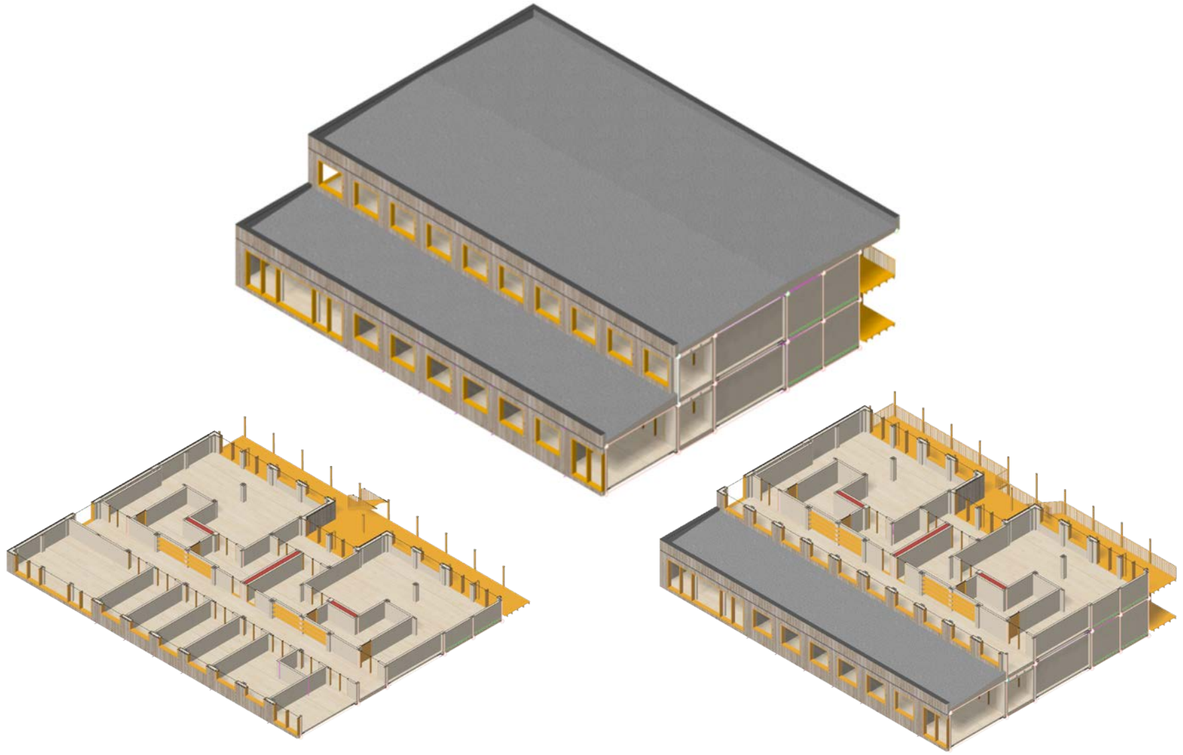

1. Korrus

2. Korrus

Kasulik pind: 1044m2
Piirete U-väärtused: võrdelised originaalile

Seotud süsiniku märgis / Carbon heroes benchmark

Originaal

F

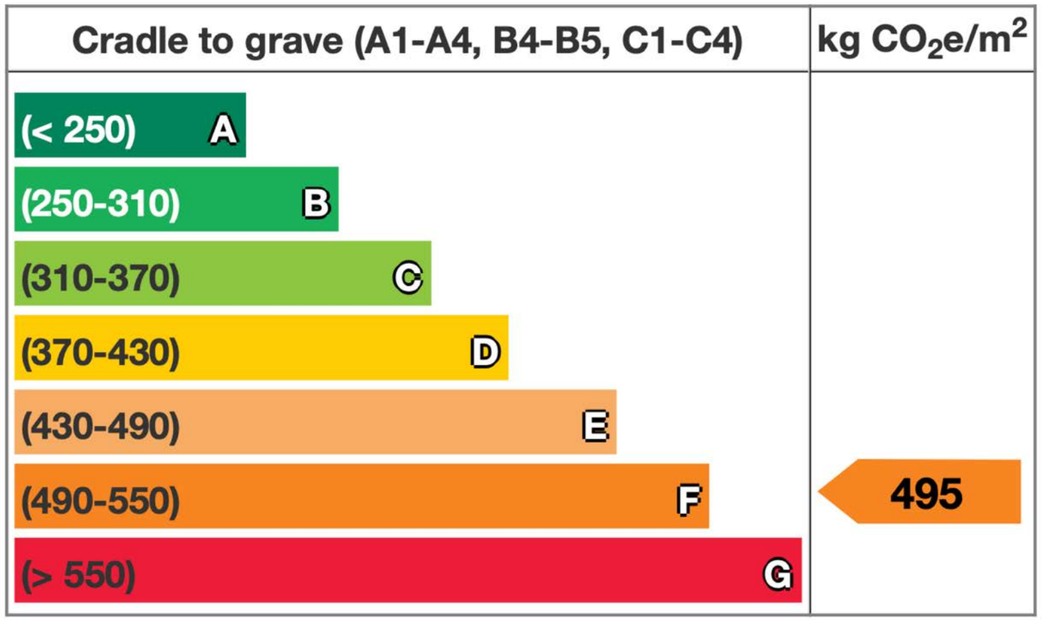

Mustermaja

A

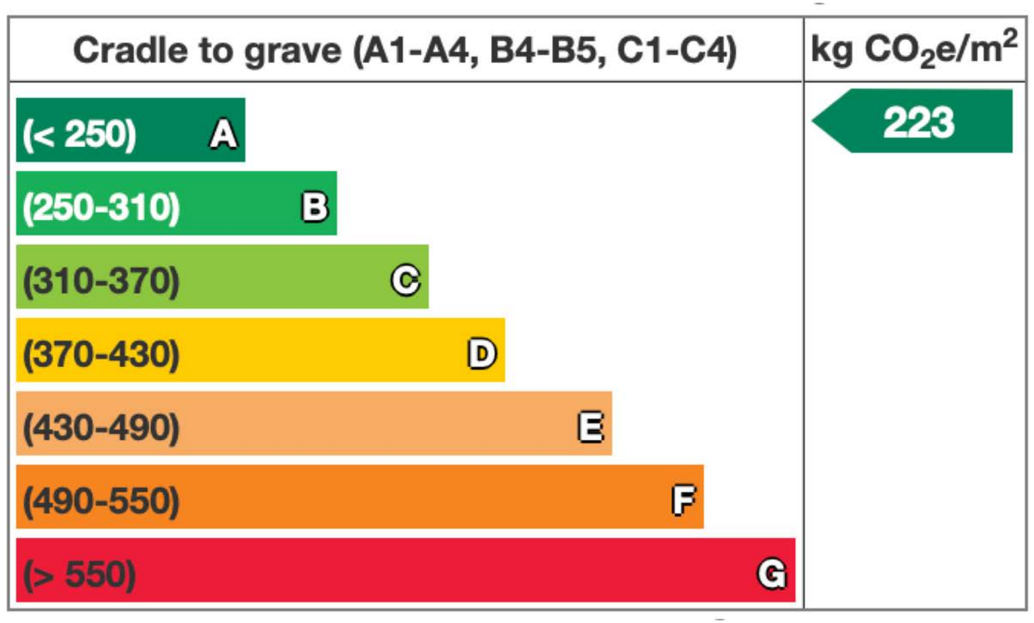

Hoone kehandi mass

Originaal	Mustermaja
	
1 468 435 kg	**324 948 kg**

Uuringu kokkuvõte

- Originnallahendus on F klassi hoone
- Musterlasteaed oleks **A klassi** hoone.
- Musterlasteaed on **5 korda kergem**, kui betoonist originaallahendus.
- Musterlasteaed on samade tehniliste näitajate korral **2-3 korda väiksema** seotud süsiniku jalajäljega.
- Mustelasteaia konstruktsioonis talletatakse **35 korda** rohkem süsinikku.

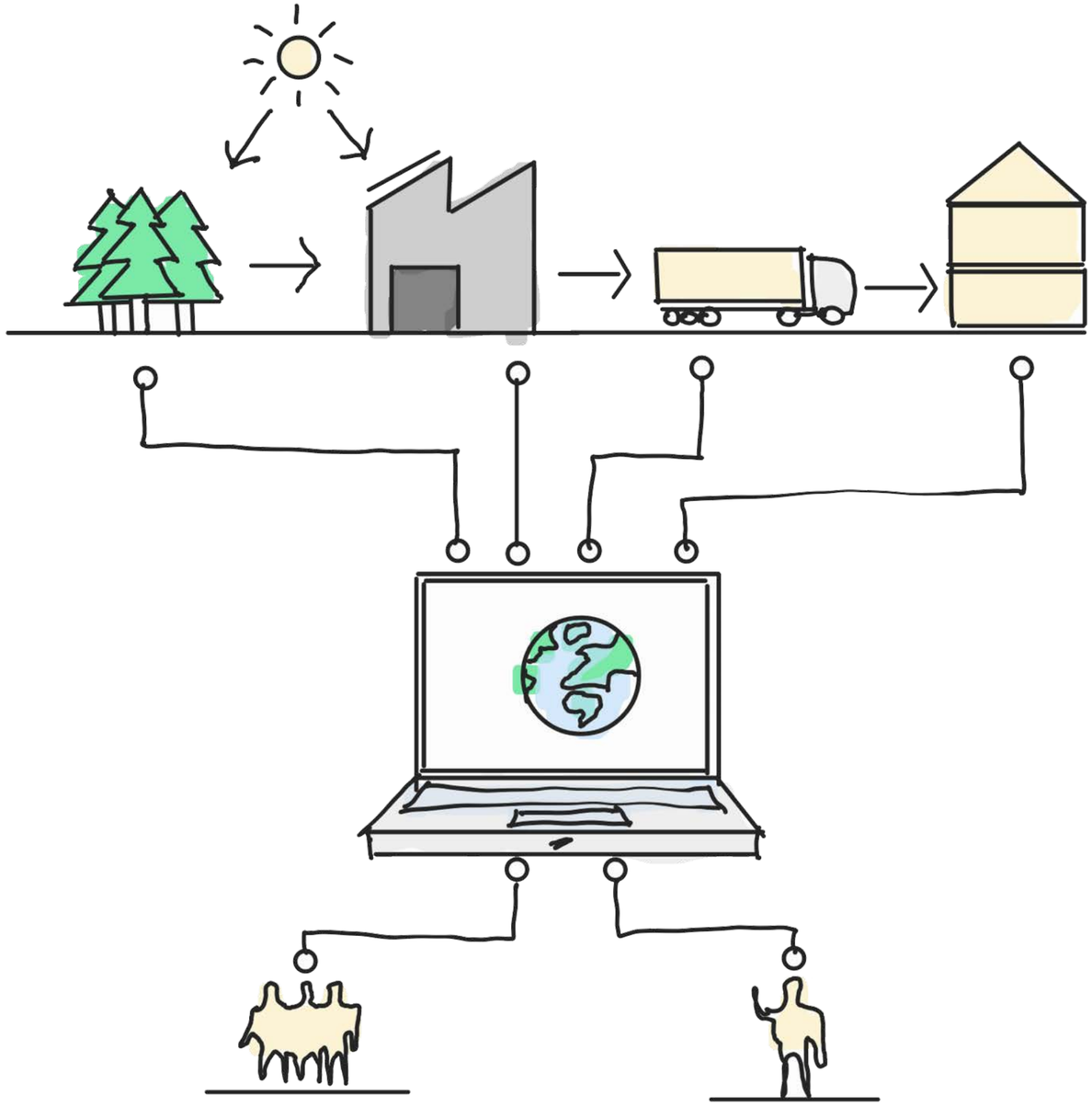

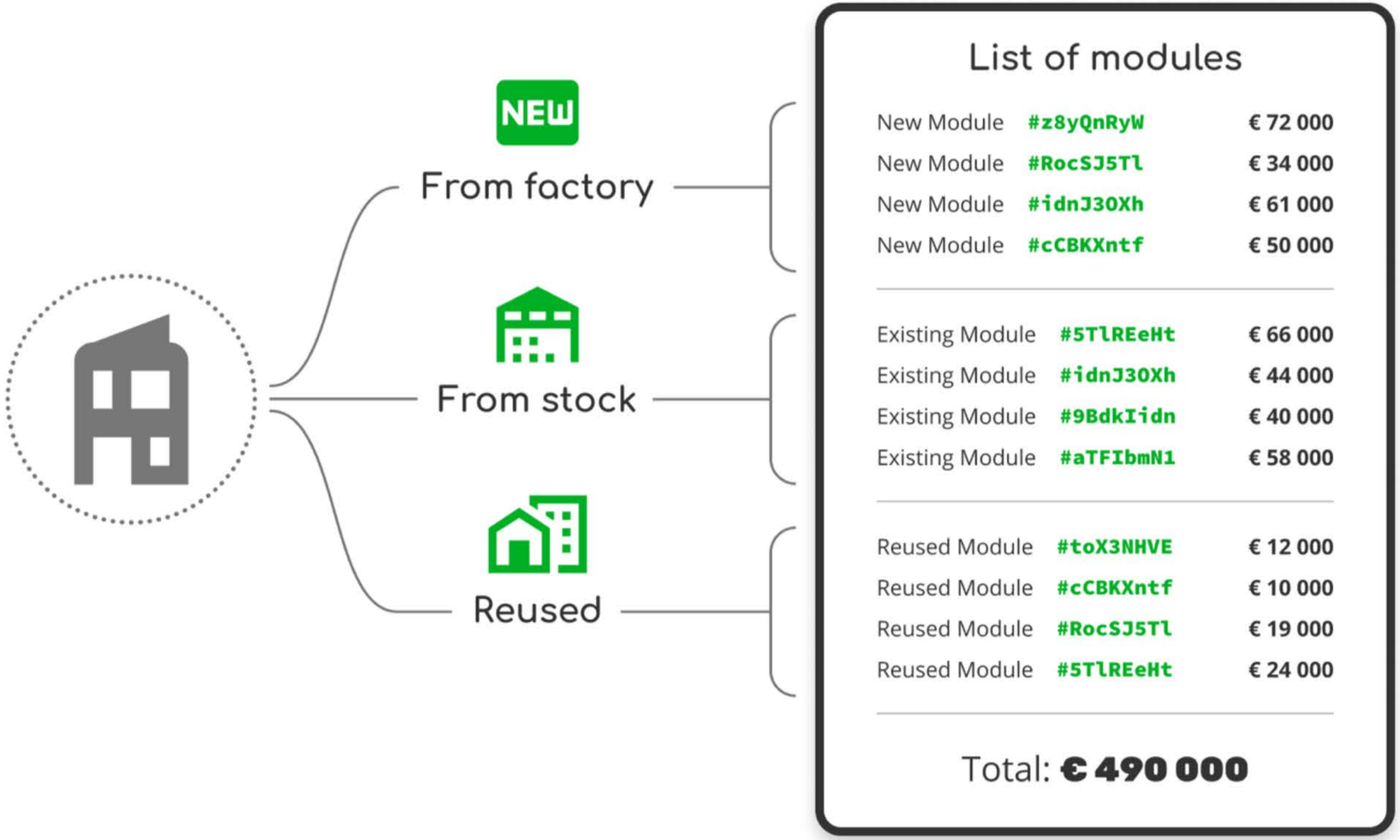
NEW
From factory
From stock
Reused
List of modules
New Module #z8yQnRyW € 72 000
New Module #RocSJ5Tl € 34 000
New Module #idnJ3OXh € 61 000
New Module #cCBKXntf € 50 000
Existing Module #5TlREeHt € 66 000
Existing Module #idnJ3OXh € 44 000
Existing Module #9BdkIidn € 40 000
Existing Module #aTFIbmN1 € 58 000
Reused Module #toX3NHVE € 12 000
Reused Module #cCBKXntf € 10 000
Reused Module #RocSJ5Tl € 19 000
Reused Module #5TlREeHt € 24 000
Total: € 490 000

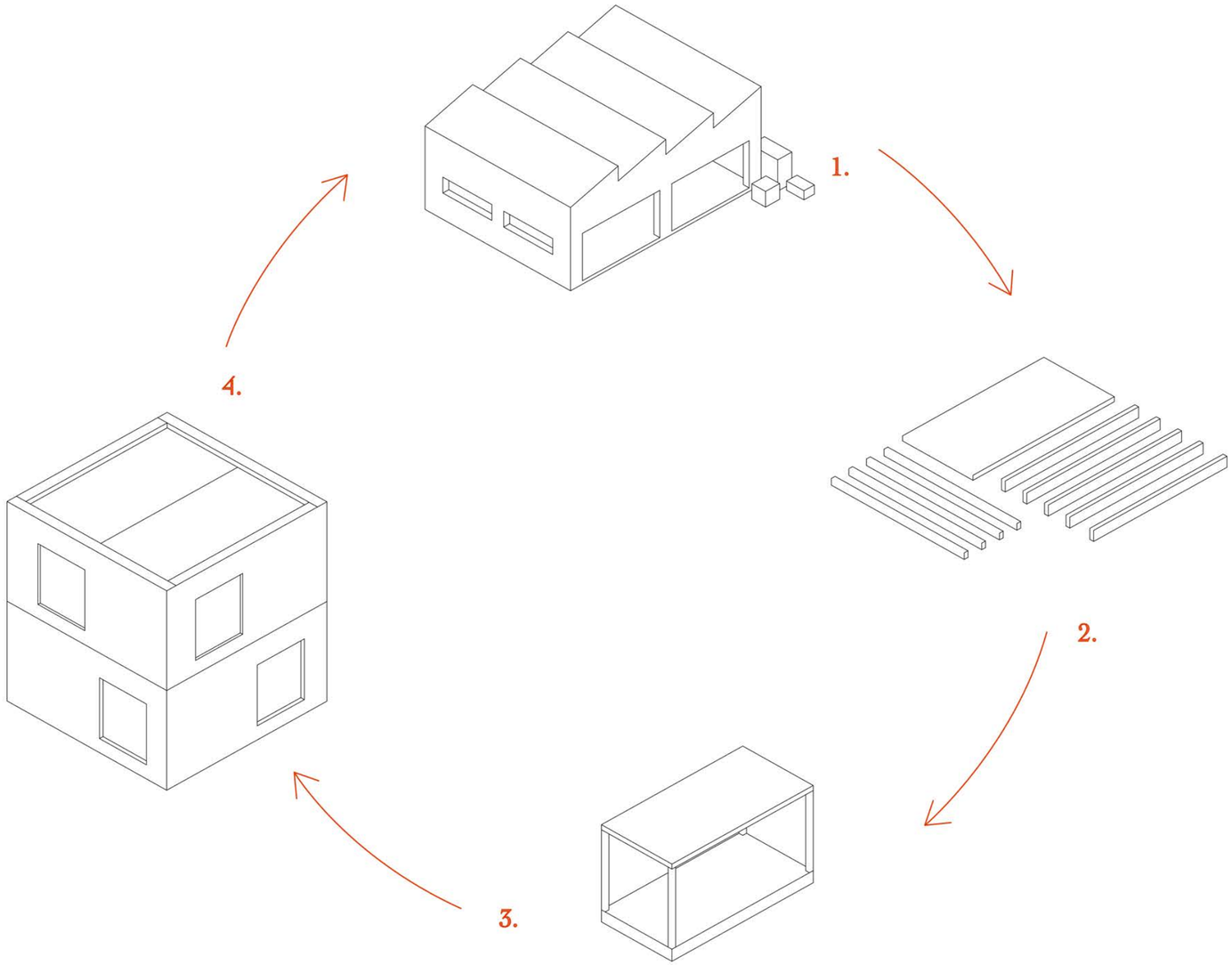
1.
2.
3.
4.

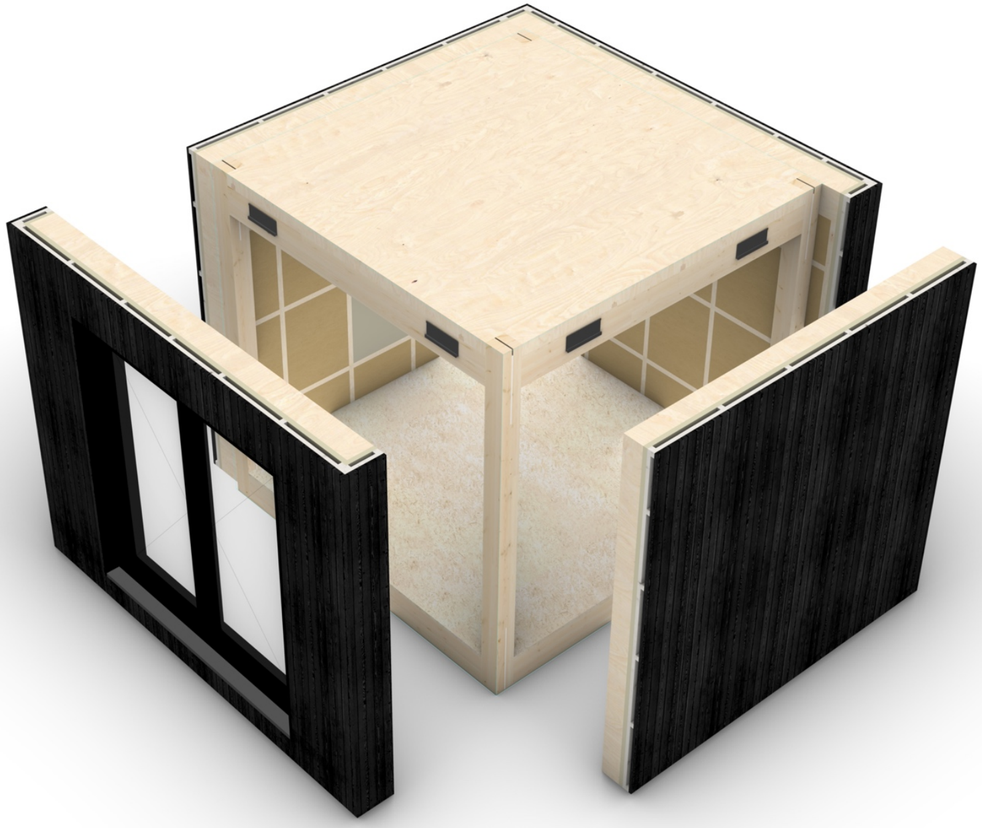

PAKKu Paviljon
EKA, MyCeen et al


SWF


Project demo
TEST CLIENT
Floors
Floor 1
Modules
M3
Roof 0-7.5
M6
Roof 0-15
M4.5
Roof 0-11.25
Wall 4.5
Window 2700
Corner
Corner
2D
3D
43%
Selected
Back facade
X 300
Y 600
Insert
Left_end
Flat
Right_end
Flat
Settings
Design
Export

Väike maakodu
Creatomus Solutions

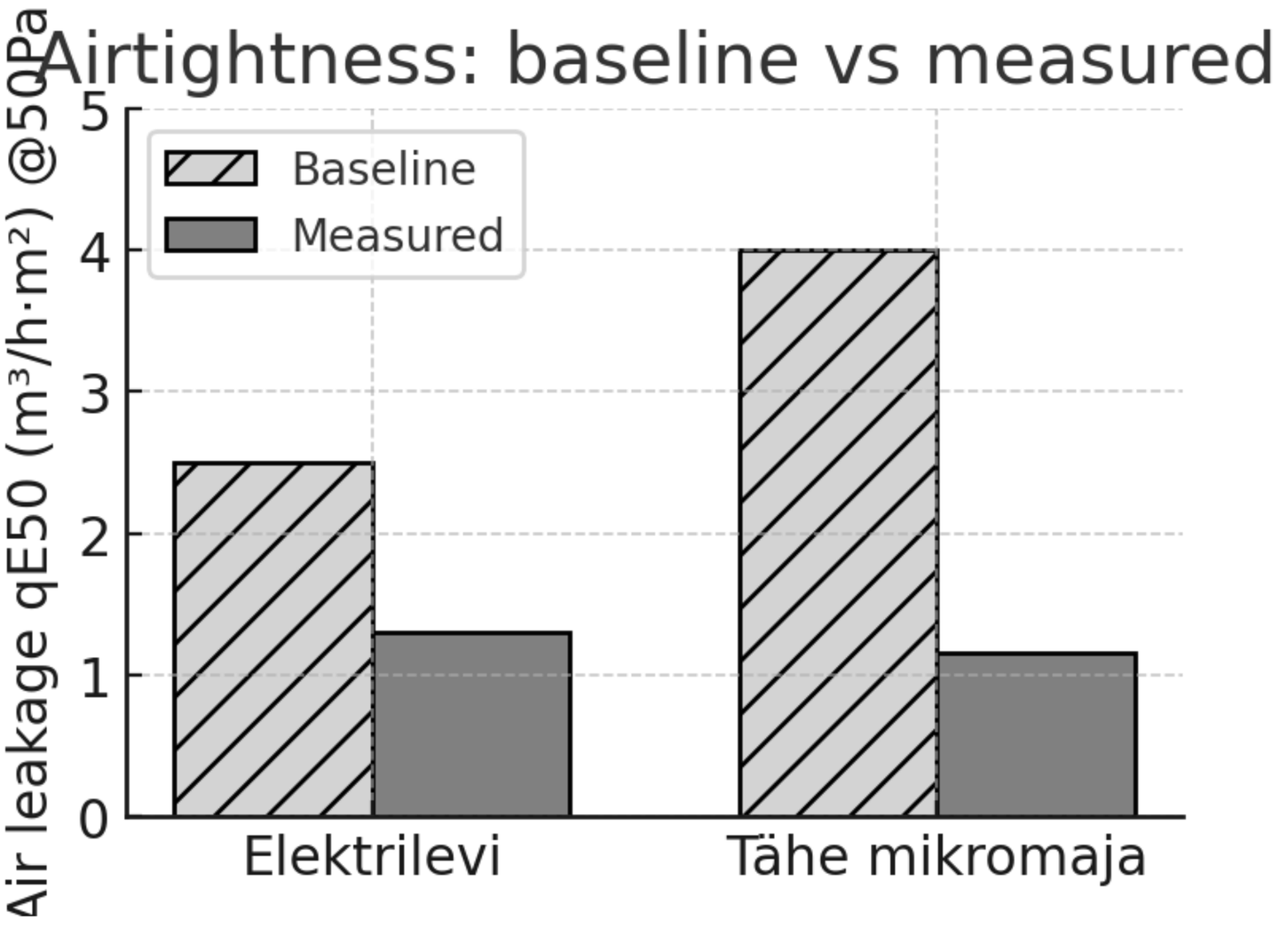
Airtightness: baseline vs measured
Air leakage qE50 (m³/h·m²) @50Pa
0
1
2
3
4
5
Baseline
Measured
Elektrilevi
Tähe mikromaja

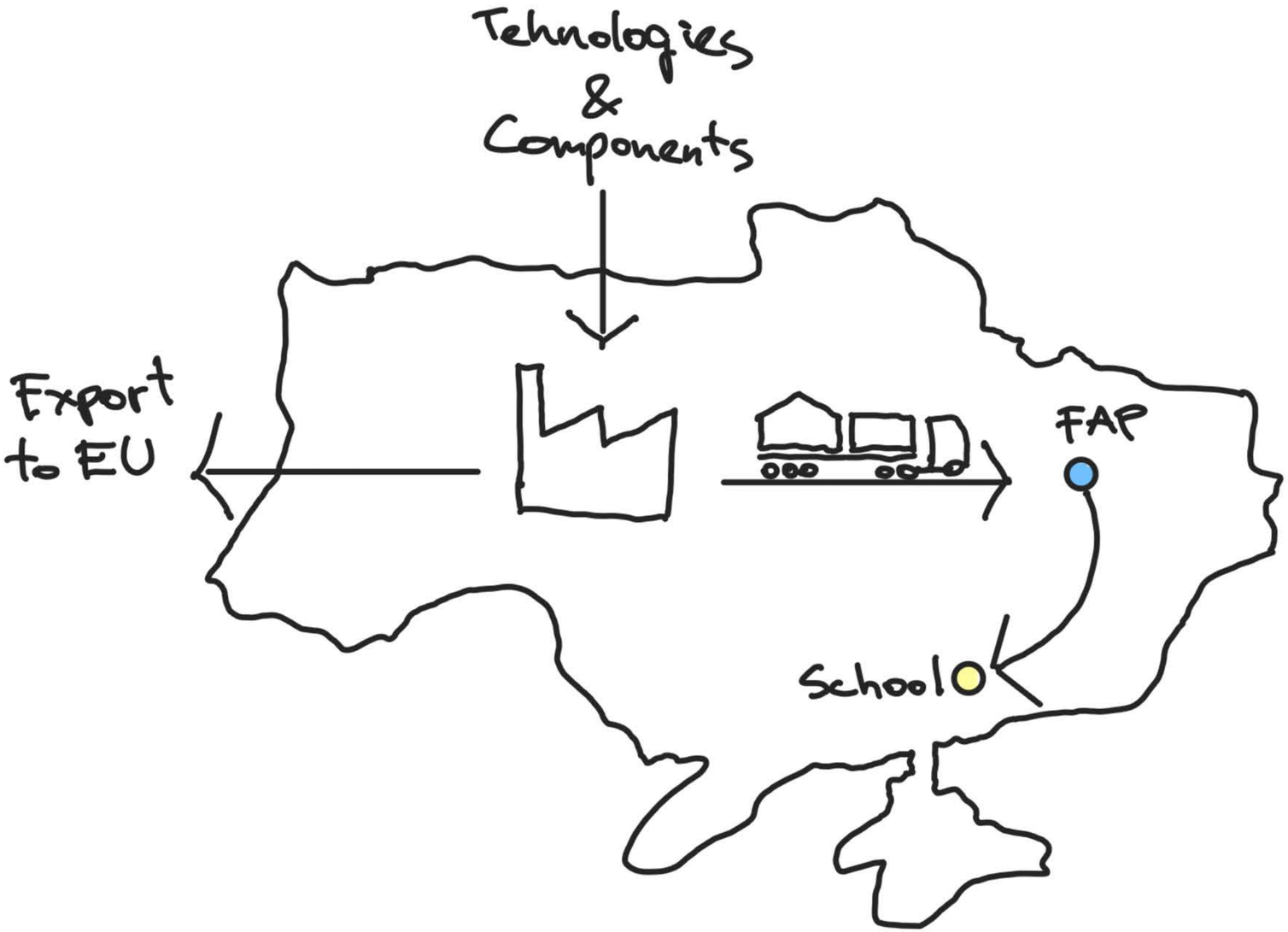
Tehnologies
&
Components
Export
to EU
FAP
School

First Aid Point, Ukraine
Andriy Golovchenko

First Aid Point, Ukraine
Andriy Golovchenko

Temporary structure

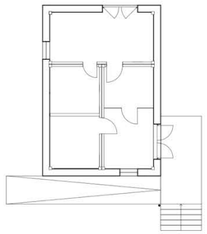

Minimum facilities

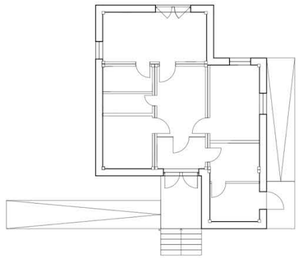

Extended facilities

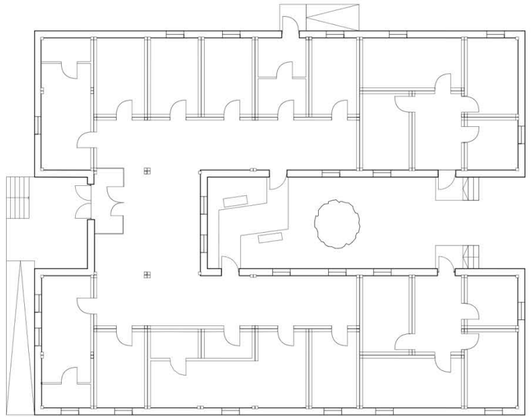

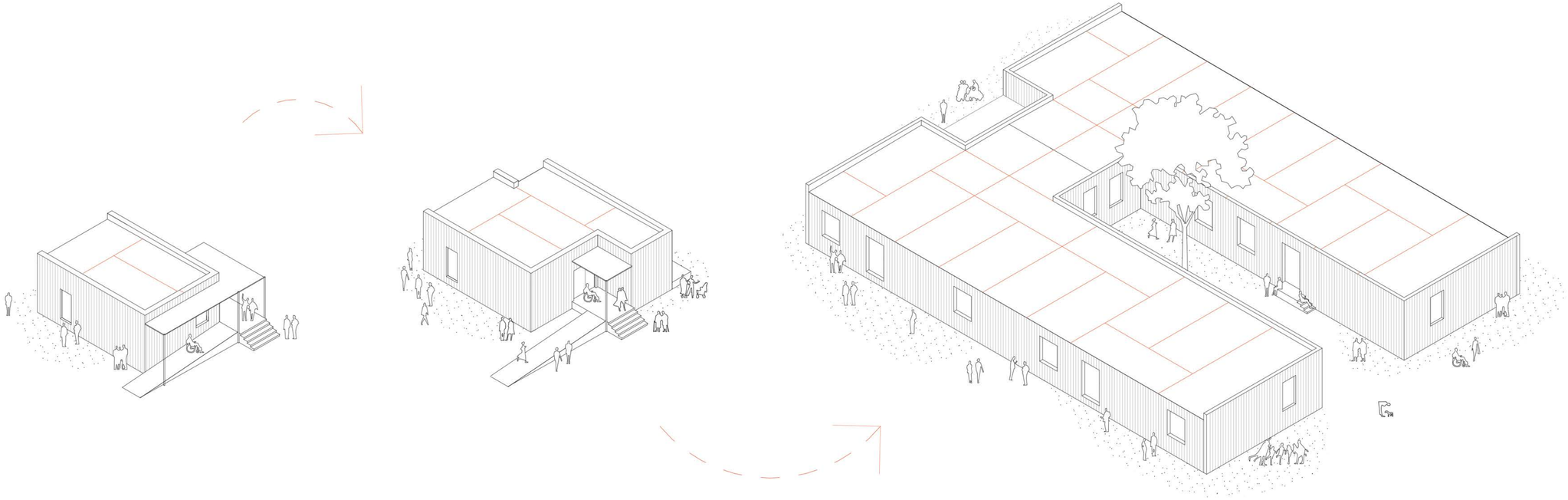

Panno school, Orange Architects

Stroomi ajutine rannahoone, TALLINN
Creatomus Solutions

Stroomi ajutine rannahoone, TALLINN
Creatomus

Stroomi ajutine rannahoone, TALLINN
Ehitus: Estnor


VOLVO
EC800


Manufaktuuri lasteaed, TALLINN
NOMAD, Creatomus, Ruumilood, Lootus

Manufaktuuri lasteaed, TALLINN
Symptom, Creatomus, Ruumilood, Lootus, NOMAD

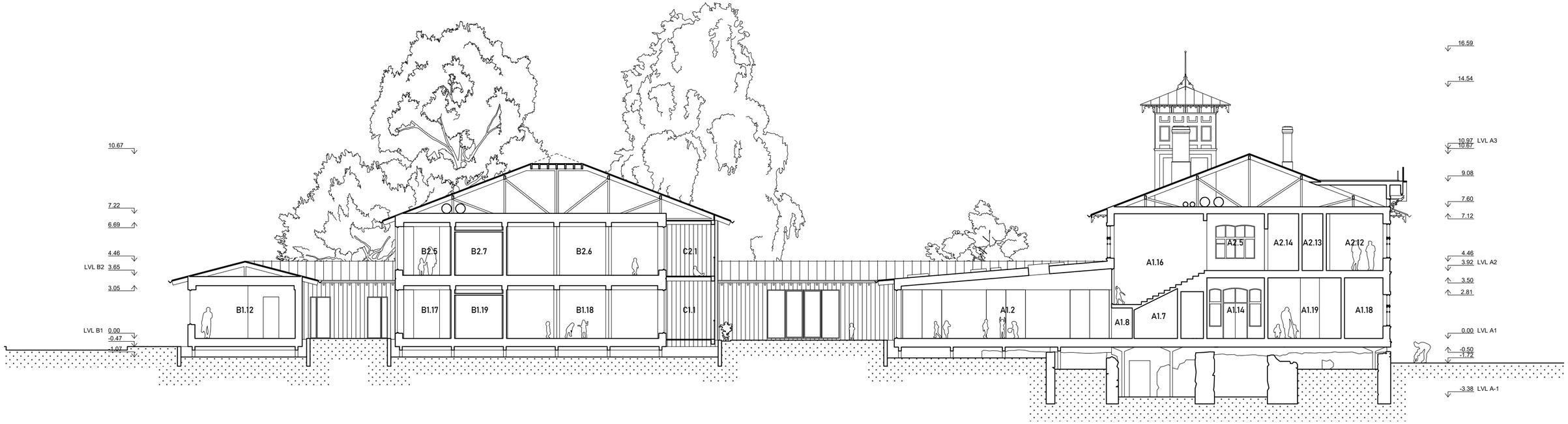

Manufaktuuri kindergarten, TALLINN
NOMAD, Creatomus, Ruumilood, Lootus

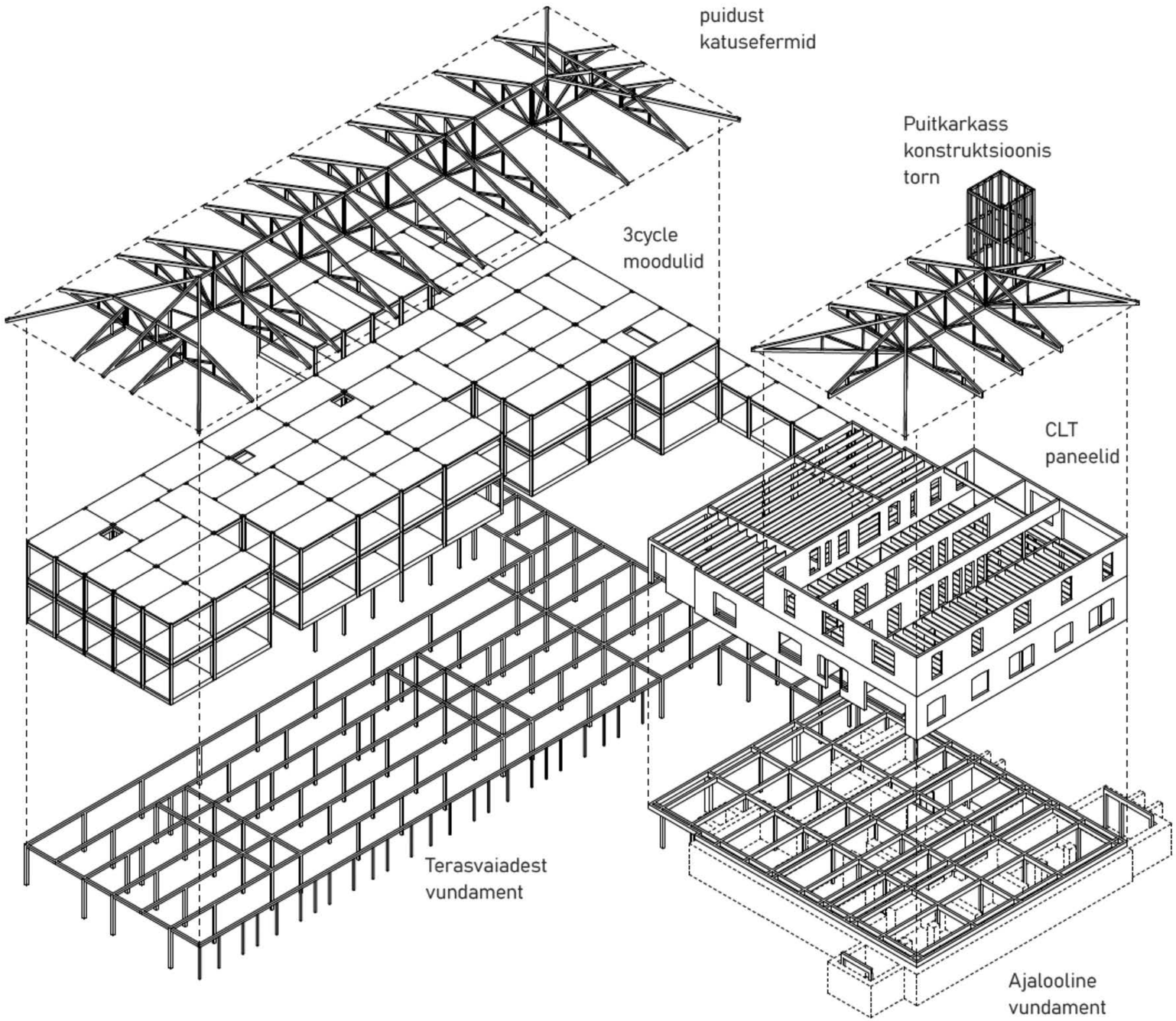
puidust
katusefermid
Puitkarkass
konstruktsioonis
torn
3cycle
moodulid
CLT
paneelid
Terasvaiadest
vundament
Ajalooline
vundament

Manufaktuuri lasteaed, TALLINN
Symptom, Creatomus, Ruumilood, Lootus, NOMAD

Lasteaed Lędzinis, Poola

Musterlasteaiad ja musterkoolid

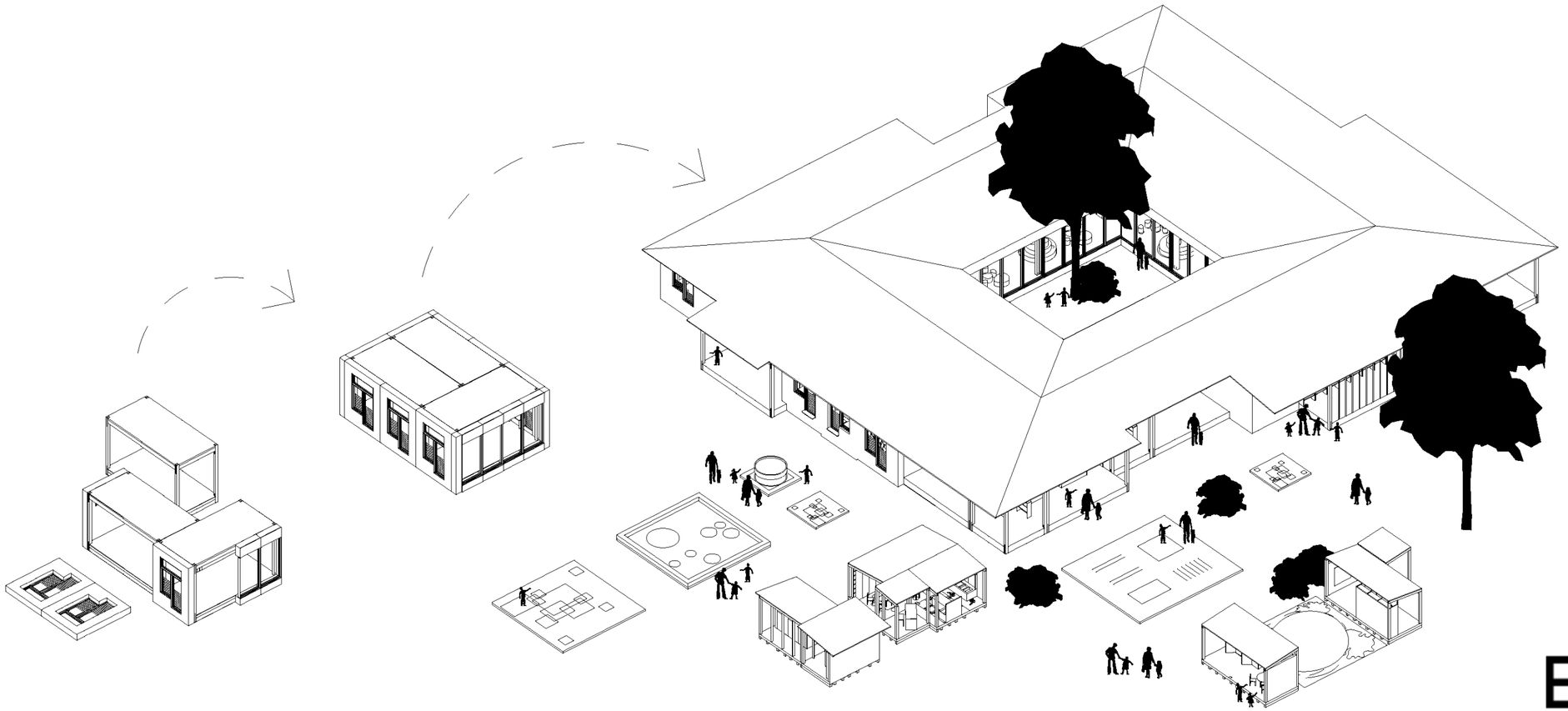

EKA
PAKK

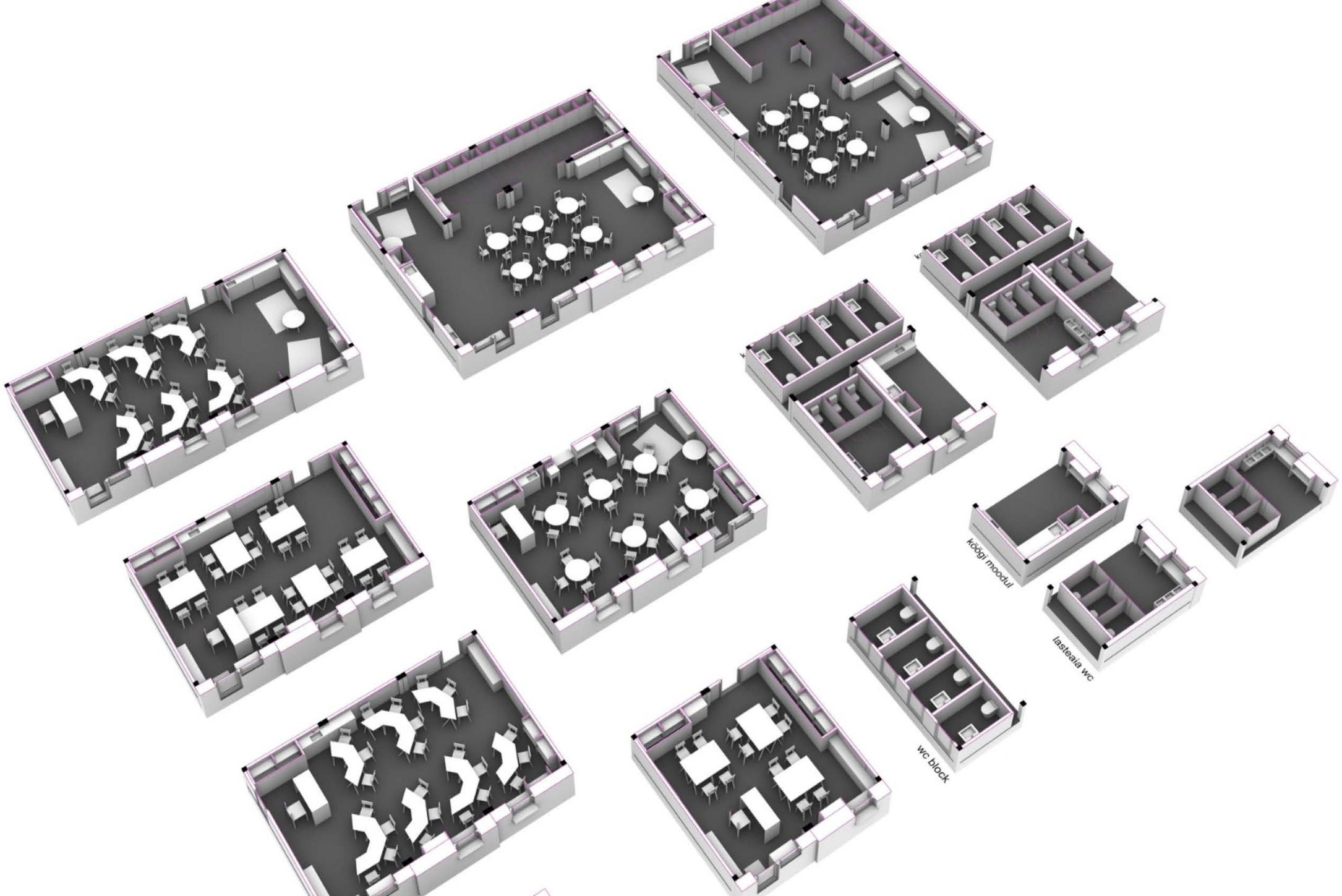
köögi moodul
lasteaia wc
wc block

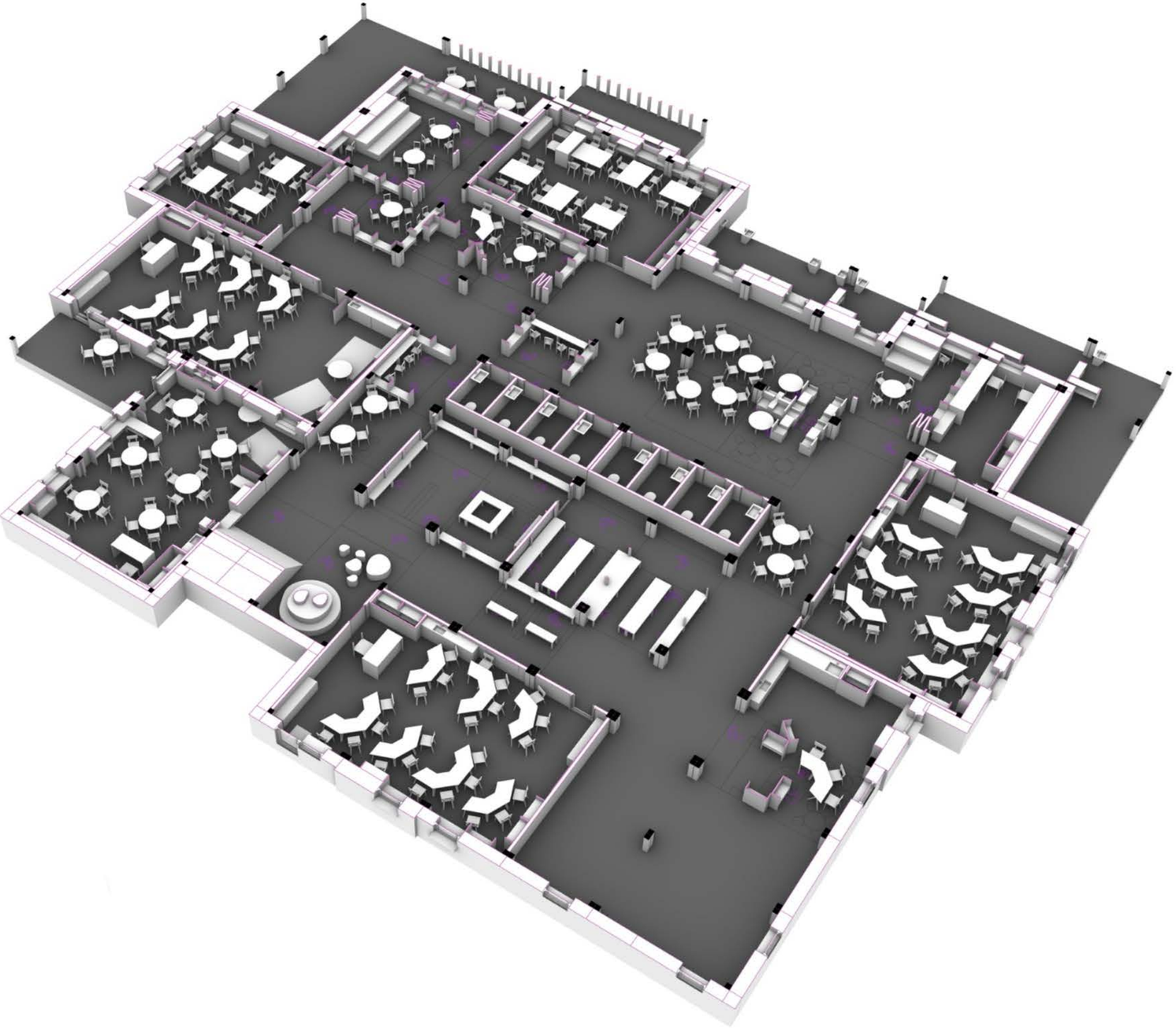

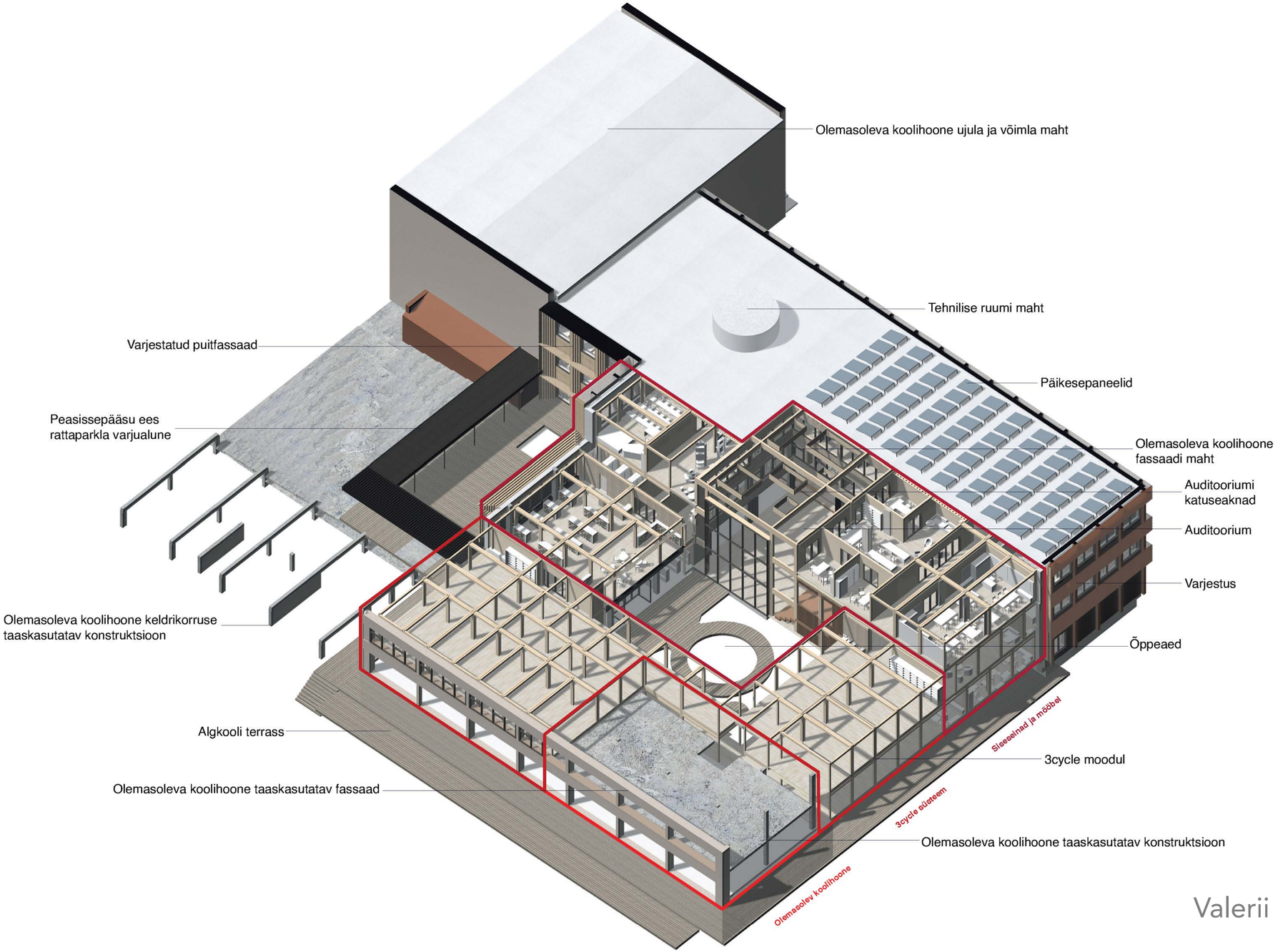

Iidla põhikool
Valerii Krinberg, Patrick Liik,
Yelyzaveta Peresada

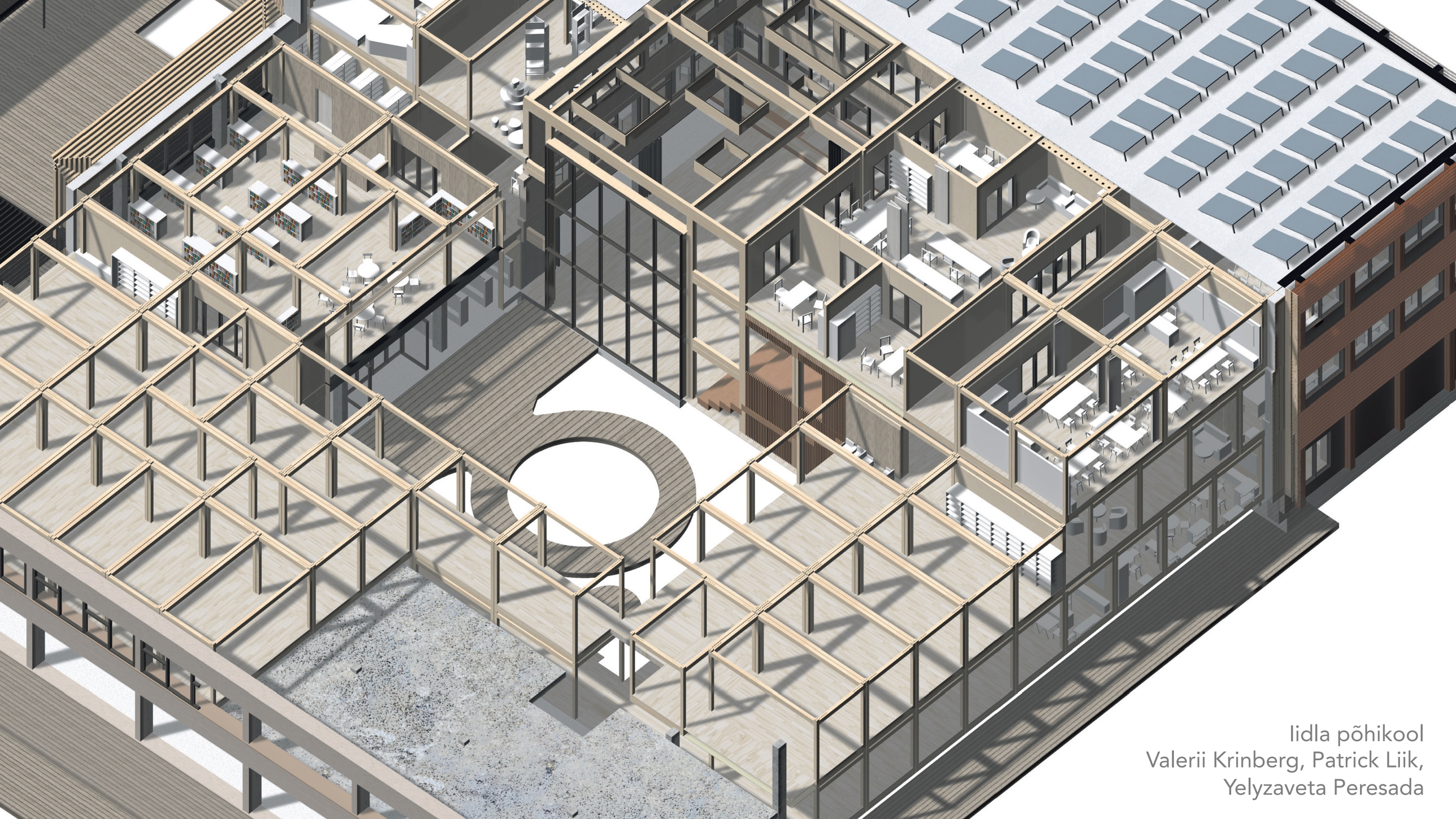

Iidla põhikool
Valerii Krinberg, Patrick Liik,
Yelyzaveta Peresada

0-heitega hooned
Süsinikku siduvad ehitusmaterjalid
Madal energiatarve

100% Eesti asi
Kogu tarneahel Eesti toormest ja tootjatest

Hajutatud energiatootmine
Integreeritud hoonetega
Tagatud energiajulgeolek

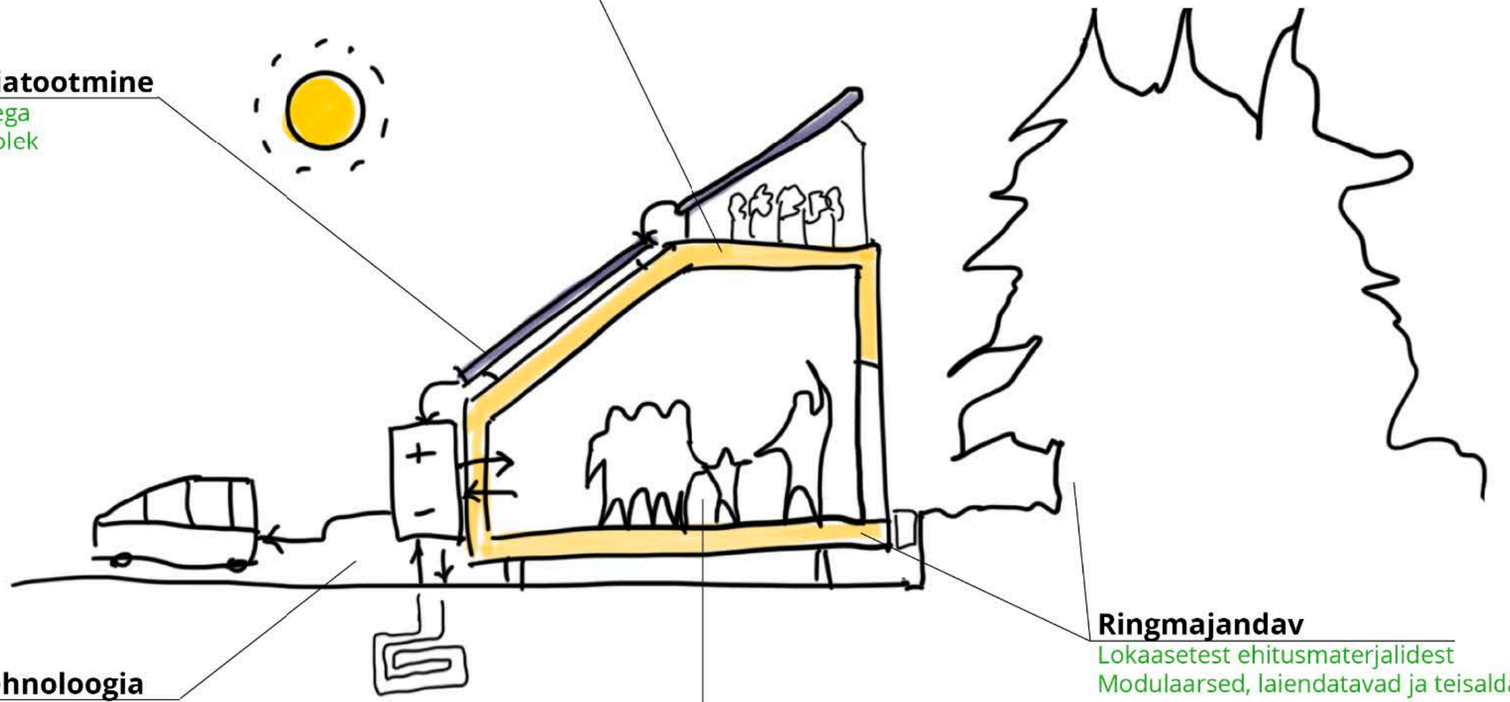

Ringmajandav
Lokaasetest ehitusmaterjalidest
Modulaarsed, laiendatavad ja teisaldatavad

Tehasemaja tehnoloogia
Edendab kohalikku ehitustööstust
Eksporditav EU-sse ja Ukraina ülesehituseks

Kogukondadele
Kestlik elu maapiirkondades
Vajaduspõhine hoonestus